NOT MEASUREMENT SENSITIVE

MIL-HDBK-138A
21 JUNE 1993

SUPERSEDING
MIL-HDBK-138
14 AUGUST 1978

CONTAINER INSPECTION HANDBOOK

FOR

COMMERCIAL AND MILITARY

INTERMODAL CONTAINERS

AMSC N/A

FSC 8115

DISTRIBUTION STATEMENT A. Approved for public release; distribution is unlimited.

FOREWORD

It is important to maintain basic safety while handling and transporting large heavily laden intermodal containers around the world. A periodic container inspection program, therefore, helps ensure that no injury to person or damage to property occurs from a structural failure or deficiency.

This handbook provides inspection criteria and procedures to be used when visually examining intermodal freight containers. Following the criteria and procedures contained herein will enable certified personnel to identify containers that are serviceable and safe for loading and shipping.

This handbook applies to the selection of any commercially owned or military owned intermodal container meeting the standards of the International Organization for Standardization (ISO) and certified under the provisions of the International Convention for Safe Containers (CSC). This handbook is specifically used by worldwide civilian and military personnel responsible for inspecting and selecting serviceable intermodal containers for shipment of Department of Defense (DOD) materiel.

The criteria contained within this handbook complies with serviceability requirements prescribed by international recommendations and mandated by United States transportation law for the shipment of United Nations (UN) Class 1 explosive materials. Although this criteria applies specifically to containers used for ammunition shipments, the DOD has adopted it for containers used for other (non-hazardous) cargoes as well.

This handbook provides a variety of helpful illustrations. While some illustrations depict acceptable container repairs, this handbook is not to be used as a standard for performing such repairs.

Some noteworthy explanations in this handbook include the careful and consistent use of some key terms. For example, a "splice" is a regulatory repair term used exclusively for repairs on components of the primary structure. A "patch" is a generic repair term used exclusively for repairs on non-primary components such as wall, roof, or door panels.

Beneficial comments (recommendations, additions, deletions), and any pertinent data that may be of use in improving this document, should be addressed to: Commander, US Army Armament Research, Development, and Engineering Center, ATTN: SMCAR-BAC-S, Picatinny Arsenal, NJ 07806-5000 by using the Standardization Document Improvement Proposal (DD Form 1426) appearing at the end of this document or by letter.

The activity that acts as Agent for MIL-HDBK-138 and largely responsible for technical content is: Director, US Army Defense Ammunition Center and School, ATTN: SMCAC-DET, Savanna, IL 61074-9639.

TABLE OF CONTENTS

PARAGRAPH		PAGE
4.2.9	Roof Panel	12
4.2.10	Roof Bow	12
4.2.11	Roof Reinforcement Plate	12
4.2.12	Tarp	12
4.2.13	TIR Cable	12
4.2.14	Flooring	12
4.2.15	Joint Strip	12
4.2.16	Threshold plate	12
4.3	Door Assembly	16
4.3.1	Door Panel	16
4.3.2	J-Bar	16
4.3.3	Hinge	16
4.3.4	Hinge Pin	16
4.3.5	Hinge Pin Weld	16
4.3.6	Locking Bar	16
4.3.7	Locking Bar Mounting Bracket	16
4.3.8	Cam	16
4.3.9	Cam Retainer	16
4.3.10	Door Locking Handle	16
4.3.11	Door Locking Handle Retainer	16
4.3.12	Anti-rack Hardware	16
4.3.13	Customs Catch	16
4.3.14	Door Seal (Gasket)	16
4.3.15	Rain Gutter	16
4.4	Special Terminology	18
4.4.1	Intermodal	18
4.4.2	MILVAN	18
4.4.3	Cargo Restraint	18
4.4.3(a)	Mechanical Restraint System	18
4.4.3(b)	Dunnage	18
4.4.3(c)	Load Bearing Surface	18
4.4.3(d)	Load Retainer	18
4.4.3(e)	Tiedown Provision (Lashing Bar or Ring)	18
4.4.3(f)	Stanchion	18
4.4.4	Tare Weight	18
4.4.5	Payload	18
4.4.6	Maximum Gross Weight	18
4.5	Conventions and Markings	22
4.5.1	ISO (International Organization for Standardization)	22
4.5.2	ISO Markings	22
4.5.3	CSC (International Convention for Safe Containers)	22
4.5.4	CSC Safety Approval Plate	22
4.5.5	ACEP (Approved Continuous Examination Program)	22
4.5.6	TIR (Transport Internationale des Routiers)	22
4.5.7	TIR Markings or Plate	22
4.5.8	TCT (Timber Component Treatment)	22
4.5.9	UIC (Union Internationale des Chemins de Fer)	22
4.5.10	Manufacturer's Data Plate	22

TABLE OF CONTENTS

PARAGRAPH		PAGE
1.	GENERAL	
1.1	Purpose	1
1.2	Scope	1
1.3	Application	1
1.4	Objective	1
2.	APPLICABLE DOCUMENTS	
2.1	Government Documents	1
2.1.1	Specifications	1
2.1.2	Other Government Documents	2
2.2	Non-Government Standards	2
3.	CONTAINER GENERAL DESCRIPTIONS	
3.1	Typical End-Opening Steel Container	3
3.2	Typical End-Opening Aluminum Container	4
3.3	Typical End-Opening FRP Container	5
3.4	Typical Side-Opening Container	6
3.5	Typical Open-Top Container	7
3.6	Typical Flatrack Container	9
4.	CONTAINER TERMINOLOGY	
4.1	Primary Structural Components	10
4.1.1	Corner Fitting	10
4.1.2	Corner Post	10
4.1.3	Door Header	10
4.1.4	Door Sill	10
4.1.5	Rear End Frame	10
4.1.6	Top End Rail	10
4.1.7	Bottom End Rail	10
4.1.8	Front End Frame	10
4.1.9	Top Side Rail	10
4.1.10	Bottom Side Rail	10
4.1.11	Cross Member	10
4.1.12	Understructure	10
4.1.13	Forklift Pockets	10
4.1.14	Forklift Pocket Strap	10
4.1.15	Gooseneck Tunnel	10
4.2	Walls, Roof, and Floor	12
4.2.1	Fiberglass Reinforced Plywood (FRP)	12
4.2.2	Wall Panel	12
4.2.3	Wall Post	12
4.2.4	Marking Panel	12
4.2.5	Lining	12
4.2.6	Lining Shield	12
4.2.7	Kick Plate	12
4.2.8	Ventilator	12

TABLE OF CONTENTS

PARAGRAPH		PAGE
4.5.11	Consolidated Data Plate	22
4.5.12	Placard Holder	22
4.5.13	Magazine Stowage Type A	22
4.6	Damage and Repair	28
4.6.1	Patch	28
4.6.2	Splice	28
4.6.3	Gusset	28
4.6.4	Backup Plate	28
4.6.5	Insert	28
4.6.6	Section	28
4.6.7	Hole	28
4.6.8	Pinhole	28
4.6.9	Welder's Hammer	28
4.6.10	Corrosive Failure	28
4.6.11	Caulking	28
4.6.12	Undercoating	28
5.	CONTAINER INSPECTION CRITERIA	
5.1	General	32
5.1.1	Regulatory Mandates	32
5.1.2	Markings and Data Plates	32
5.1.3	Configuration	32
5.2	Primary Structural Components	34
5.2.1	Major Defects	34
5.2.2	Acceptable Welding Patterns	34
5.2.3	Acceptable Splicing	34
5.2.4	Corner Fittings	35
5.2.5	Corner Posts	35
5.2.6	Rear End Frame	36
5.2.7	Front End Frame	38
5.2.8	Side Rails	40
5.2.9	Floor Cross Members	44
5.2.10	Cross Member Juncture with Side Rail	44
5.2.11	Acceptable Splicing on Cross Members	44
5.2.12	Cross Member Stiffeners	44
5.2.13	Gussets and End Rail Stiffeners	44
5.2.14	Structural Integrity of Understructure	44
5.2.15	Forklift Pockets	48
5.3	Non-Primary Components	50
5.3.1	Serviceability of Panels	50
5.3.2	Acceptable Patching	50
5.3.3	Side and End Wall Panels	50
5.3.4	Closed Roof Assembly	52
5.3.5	Removable Cover (Tarp) Assembly	54
5.3.6	Serviceability of Cover (Tarp) Assembly	54
5.3.7	General Type Door Assembly	56
5.3.8	Ramp Type Door	56

TABLE OF CONTENTS

PARAGRAPH		PAGE
5.3.9	Cargo Restraint	61
5.3.9(a)	Mechanical Restraint System	61
5.3.9(b)	Load Bearing Surfaces	61
5.3.9(c)	Load Retainers	61
5.3.9(d)	Tiedown Provisions (Lashing Bars or Rings)	61
5.3.9(e)	Stanchions	61
5.3.10	Flooring	65
5.3.11	Acceptable Flooring Repairs	65
5.3.12	Acceptable Floor Gaps	65
5.3.13	Structural Integrity of Floor Structure	65
5.3.14	Miscellaneous Components	68
5.3.14(a)	Threshold Plate	68
5.3.14(b)	Lining and Lining Shield	68
5.3.14(c)	Ventilator	68
5.3.14(d)	Placard Holder	68
5.3.14(e)	Pop Rivets	68
5.3.14(f)	Door Holder (Tieback)	68
6.	CONTAINER INSPECTION PROCEDURES	
6.1	Prerequisites	69
6.1.1	Container Type	69
6.1.2	Inspector Qualifications	69
6.1.3	Owner Representative	69
6.1.4	Judgement of Criteria	69
6.2	Suggested Tools and Equipment	69
6.2.1	Straight Edge	69
6.2.2	Measuring Tape (Ruler)	69
6.2.3	Welder's Hammer	69
6.2.4	Ladder	69
6.2.5	Inspection Stands	69
6.2.6	Flashlight	69
6.2.7	Chalk	69
6.2.8	Feeler Gauge	69
6.3	Documents	70
6.3.1	Inspection Checklist	70
6.3.2	DD Form 2282 Decal	70
6.3.3	Inspection Report	70
6.4	Recommended Inspection Sequence	70
6.4.1	Markings and Data Plates	70
6.4.2	Overall Configuration	70
6.4.3	Door End or Side	70
6.4.4	Exterior Sides or Ends	71
6.4.5	Roof (Exterior)	71
6.4.6	Understructure	71
6.4.7	Interior	71
6.4.8	Light Leak Test	71

TABLE OF CONTENTS

FIGURE		PAGE
3.1	Typical End-Opening Steel Container	3
3.2	Typical End-Opening Aluminum Container	4
3.3	Typical End-Opening FRP Container	5
3.4	Typical Side-Opening Container	6
3.5A	Typical 1/2 High Open-Top Container	7
3.5B	Typical 2/3 High Open-Top Container	8
3.6	Typical Flatrack Container	9
4.1	Primary Structural Components	11
4.2A	Typical Steel Container (Exploded View)	13
4.2B	Typical Aluminum Container (Exploded View)	14
4.2C	Fiberglass Reinforced Plywood (FRP)	15
4.2D	Removable Cover (Tarp) Assembly	15
4.3	Typical Rear End Door Assembly	17
4.4A	Mechanical Restraint System for MILVAN	19
4.4B	Cargo Restraint for End-Opening Container	20
4.4C	Cargo Restraint for Side-Opening Container	21
4.4D	Restraint Provisions for Flatrack Container	21
4.5A	Typical Door Markings	23
4.5B	Typical Horizontal Layout of ISO Identification Markings	24
4.5C	Typical Vertical Layout of ISO Identification Markings	25
4.5D	Format of CSC Plate	26
4.5E	Typical Consolidated Data Plate	27
4.6A	Typical Patches on Wall	29
4.6B	Typical Splices in Rails	30
4.6C	Typical Reinforced Door Sill	31
4.6D	Welder's Hammer	31
5.1	ISO Dimensions and Tolerances	33
5.2.1	NOT USED	«»
5.2.2	NOT USED	«»
5.2.3	NOT USED	«»
5.2.4	Corner Fitting	35
5.2.5	Corner Post	35
5.2.6A	Rear End Frame	36
5.2.6B	Splice Limitations for Door Header	37
5.2.7A	Front End Frame	38
5.2.7B	Splice Limitations for End Rails	39
5.2.8A	Steel Side Rail	40
5.2.8B	Aluminum Side Rail	40
5.2.8C	Splice Limitations for Side Rails	41
5.2.8D	Examples of Top Side Rail Splices	42
5.2.8E	Examples of Bottom Rail Inserts	43
5.2.9A	Cross Member Repair Limitations	45
5.2.9B	Dent and Bend Limitations for Cross Members	46
5.2.9C	Unacceptable Cross Member Damage	47
5.2.9D	Bottom End Rail (MILVAN)	47

TABLE OF CONTENTS

FIGURE		PAGE
5.2.10	NOT USED	«»
5.2.11	NOT USED	«»
5.2.12	NOT USED	«»
5.2.13	NOT USED	«»
5.2.14	NOT USED	«»
5.2.15	Examples of Forklift Pocket Damage	48
5.2.16A	Collapsible Flatrack End Wall Damage	49
5.2.16B	Swinging Header Damage	49
5.3.1	NOT USED	«»
5.3.2	Acceptable Wall Patches	51
5.3.3	NOT USED	«»
5.3.4A	Roof Assembly Damage	52
5.3.4B	Repaired Roof Assembly	53
5.3.5	Removable Cover (Tarp) Assembly	55
5.3.6	NOT USED	«»
5.3.7A	Rear End Door Assembly Damage	57
5.3.7B	Patched Door Panel	58
5.3.7C	TIR Requirements for Brackets	59
5.3.7D	Customs Catch on a Steel Door	59
5.3.8	Ramp Type Door Damage	60
5.3.9A	Mechanical Restraint System Damage	62
5.3.9B	Load Retainer Damage	63
5.3.9C	Damaged Flatrack Restraint Provisions	64
5.3.10	Flooring Damage	66
5.3.11	Example of Flooring Repair	67

APPENDIX		PAGE
A	End-Opening Container Inspection Checklist	72
A	Side-Opening Container Inspection Checklist	73
A	Open-Top Container Inspection Checklist	74
A	Flatrack Container Inspection Checklist	75
B	Assembly Drawing for Container Inspection Stand	76
C	Alphabetical Index of Terminology	79

1. GENERAL

1.1 Purpose. This handbook provides inspection criteria and procedures to be used when visually examining intermodal freight containers. Following the criteria and procedures contained herein will enable certified personnel to identify containers that are serviceable and safe for loading and shipping. NOTE: This handbook is not to be used as a standard for performing container repairs.

1.2 Scope. This handbook applies to the selection of any commercially owned or military owned intermodal container meeting the standards of the International Organization for Standardization (ISO) and certified under the provisions of the International Convention for Safe Containers (CSC). This handbook is specifically used by worldwide civilian and military personnel responsible for inspecting and selecting serviceable intermodal containers for shipment of Department of Defense (DOD) materiel.

1.3 Application. The criteria contained within this handbook complies with serviceability requirements prescribed by international recommendations and mandated by United States transportation law for the shipment of United Nations (UN) Class 1 explosive materials. Although this criteria applies specifically to containers used for ammunition shipments, the DOD has adopted it for containers used for other (non-hazardous) cargoes as well.

1.4 Objective. Inspecting personnel will use this handbook to cause:

a. Inspection standardization among DOD agencies for selection of intermodal containers either owned or leased by the DOD;

b. Preparation of inspection reports that are properly annotated to reflect container condition and reason(s) for rejection; and

c. Compliance with international recommendations and United States transportation law.

2. APPLICABLE DOCUMENTS

2.1 Government Documents.

2.1.1 Specifications. The following specifications form a part of this handbook to the extent specified herein. Unless otherwise specified, the issues of these specifications are those in effect at the time of inspection.

FEDERAL SPECIFICATIONS

A-A-52029	Container, Cargo, Side-Opening
A-A-52032	Container, Cargo, End-Opening
A-A-52033	Container, Cargo, Half-High

MILITARY SPECIFICATIONS

MIL-C-52661 Containers, Cargo

(Unless otherwise indicated, copies of federal and military specifications are available from the Naval Publications and Forms Center, Standardization Documents Order Desk, Building 4D, 700 Robbins Avenue, Philadelphia, PA 19111-5094.)

2.1.2 Other Government Documents. The following other Government documents form a part of this handbook to the extent specified herein. Unless otherwise specified, the issues are those in effect at the time of inspection.

DEPARTMENT OF TRANSPORTATION (DOT)

CFR 49 Code of Federal Regulations - Transportation

(Application for copies should be addressed to Superintendent of Documents, US Government Printing Office, Washington, DC 20402.)

INTERNATIONAL MARITIME ORGANIZATION (IMO)

CSC International Convention for Safe Containers

IMDG Code International Maritime Dangerous Goods Code

TIR Customs Convention - Transport Internationale des Routiers

(Application for copies should be addressed to the Commandant, (G-MVI), US Coast Guard, 2100 Second Street S.W., Washington, DC 20593-0001. Alternatively, copies of these documents may be obtained directly from the International Maritime Organization, 4 Albert Embankment, London, SE1 7SR, England.)

2.2 Non-Government Standards. The following standards form a part of this specification to the extent specified herein. Unless otherwise specified, the issues are those in effect at the time of inspection.

INTERNATIONAL ORGANIZATION FOR STANDARDIZATION (ISO)

ISO 668 Series 1 Freight Containers - Classification, Dimensions and Ratings

ISO 1161 Series 1 Freight Containers - Corner Fittings Specification

ISO 1496 Series 1 Freight Containers - Specification and Testing

ISO 6346 Freight Containers - Coding, Identification and Marking

(Application for copies should be addressed to the American National Standards Institute, 1430 Broadway, New York, NY 10018-3308.)

3. CONTAINER GENERAL DESCRIPTIONS

3.1 Typical End-Opening Steel Container. See Figure 3.1. The most common type of freight container is the general purpose dry cargo type that completely encloses its contents by permanent steel structures and provides cargo loading access through end opening doors. Typical steel containers can be 10, 20, 30, or 40 feet long by 8 or 8-1/2 feet high. The standard width of an intermodal container is 8 feet. The walls of a typical steel container are usually constructed of corrugated sheet steel panels that are welded to the main structural steel top and bottom side rails and end frames. The end frames are fitted with standard corner fittings (steel castings) at all eight corners that are welded to the four corner posts, top and bottom side and front rails, and rear door sill and header. The roof is usually constructed of either flat or corrugated sheet steel panels welded to the top side and end rails and door header and may have roof bows for support. The doors are usually either shaped steel frame with steel panels or plymetal (steel faced wood) panels fitted with locking and anti-rack hardware and weather-proof seals (gaskets). The flooring may be soft or hard laminated woods, planking, plywood, or composition material either screwed or bolted to the floor cross members. The floor cross members may be box, C, Z, or I shaped steel beams bolted or welded to the bottom side rails. Some containers are configured with an all-steel flooring or a combination of wood and steel. An intermodal freight container is primarily handled via connection with its internationally standard corner fittings; however, many steel containers are also provided with empty and/or loaded capacity forklift pockets to improve container handling versatility. Performance specifications for a typical end-opening steel container are provided by commercial item description A-A-52032.

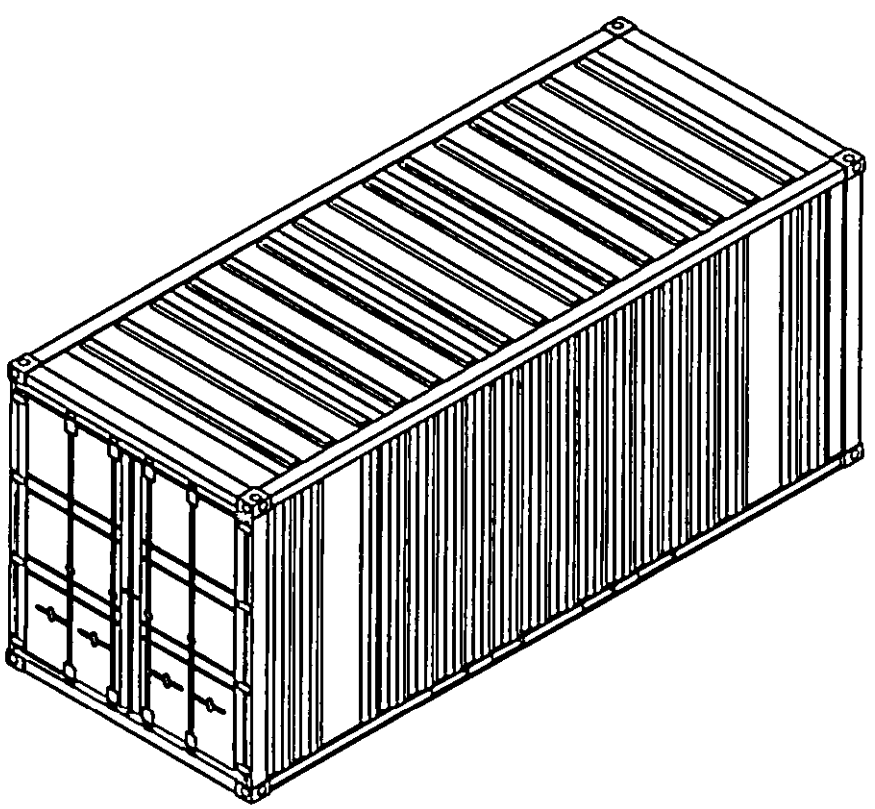

FIGURE 3.1 - TYPICAL END-OPENING STEEL CONTAINER

3.2 Typical End-Opening Aluminum Container. See Figure 3.2. A typical end-opening aluminum container, often referred to as aluminum/steel container, usually has steel end frames and structural steel or extruded aluminum side rails. The end frames are fitted with standard corner fittings (steel castings) at all eight corners. The walls are constructed of either interior or exterior intermediate aluminum posts to which sheet aluminum is riveted or welded. The inside walls usually have a plywood liner either riveted to the intermediate posts or over top the sheet aluminum. The door panels are either aluminum post and sheet construction or plymetal (metal faced wood) construction and are fitted with steel locking and anti-racking hardware and weather-proof seals (gaskets). Roof bows, that support the aluminum roof panels, are usually aluminum extrusions that are bolted, riveted, or welded to the top rails. The floor cross members may be box, C, Z, or I shaped beams of either steel or aluminum that are bolted, riveted, or welded to the bottom side rails. The flooring may be soft or hard laminated woods, planking, or plywood either screwed or bolted to the floor cross members. The nominal dimensions and many construction details are otherwise similar to those of steel end-opening containers.

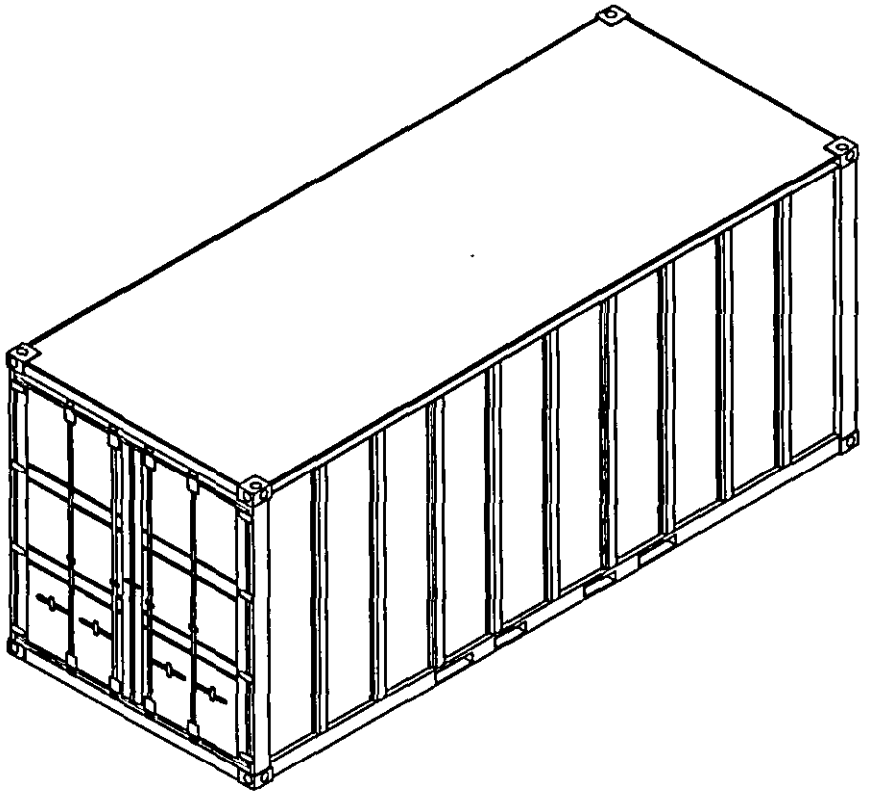

FIGURE 3.2 - TYPICAL END-OPENING ALUMINUM CONTAINER

3.3 Typical End-Opening FRP Container. See Figure 3.3. A typical end-opening Fiberglass Reinforced Plywood (FRP) container is usually constructed of structural steel framing; fitted with standard corner fittings (steel castings) at all eight corners; and has FRP panels on the side walls, front end wall, and roof. Normally there are no roof bows used to support the roof panel. The FRP panels are usually imbedded in a mastic, to provide water tightness, and are riveted to the top and bottom rails and the corner posts. The door panels are also constructed of FRP and are fitted with steel locking and anti-rack hardware and weather-proof seals (gaskets). The floor cross members may be box, C, Z, or I shaped beams. The flooring may be soft or hard laminated woods, planking, or plywood either screwed or bolted to the cross members. The nominal dimensions and many construction details are otherwise similar to those of steel end-opening containers.

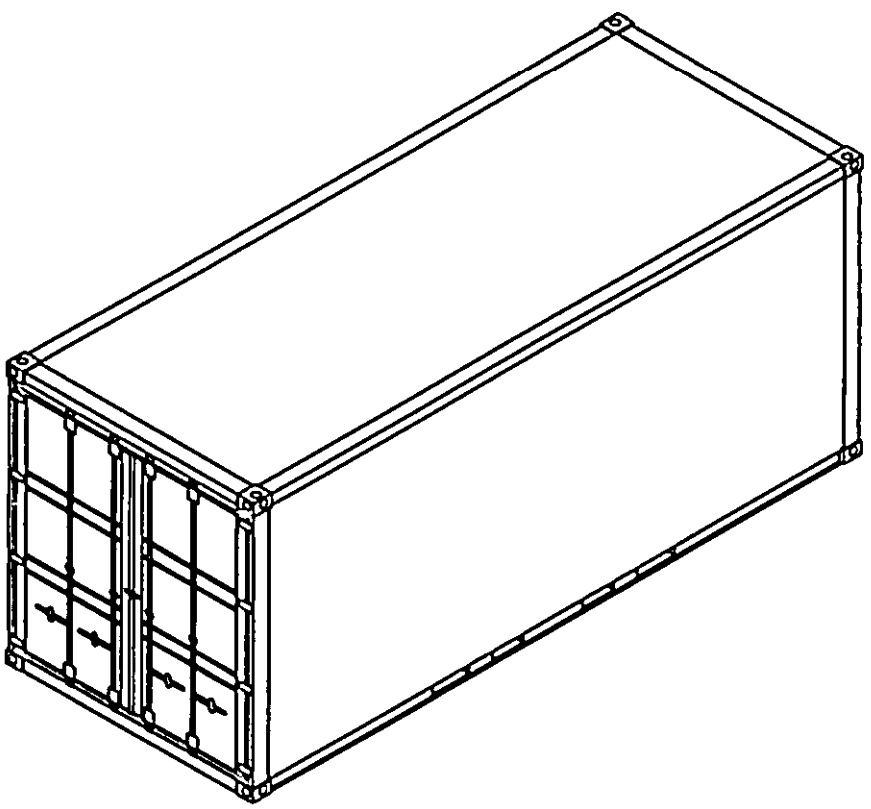

FIGURE 3.3 - TYPICAL END-OPENING FRP CONTAINER

3.4 Typical Side-Opening Container. See Figure 3.4. A side-opening container is similar in many respects to a typical steel end-opening container except there are doors on the side to provide access to the cargo space and the bottom side rails usually have a deeper profile. There may or may not be doors in the end frame of the container. Performance specifications for a typical side-opening container are provided by commercial item description A-A-52029.

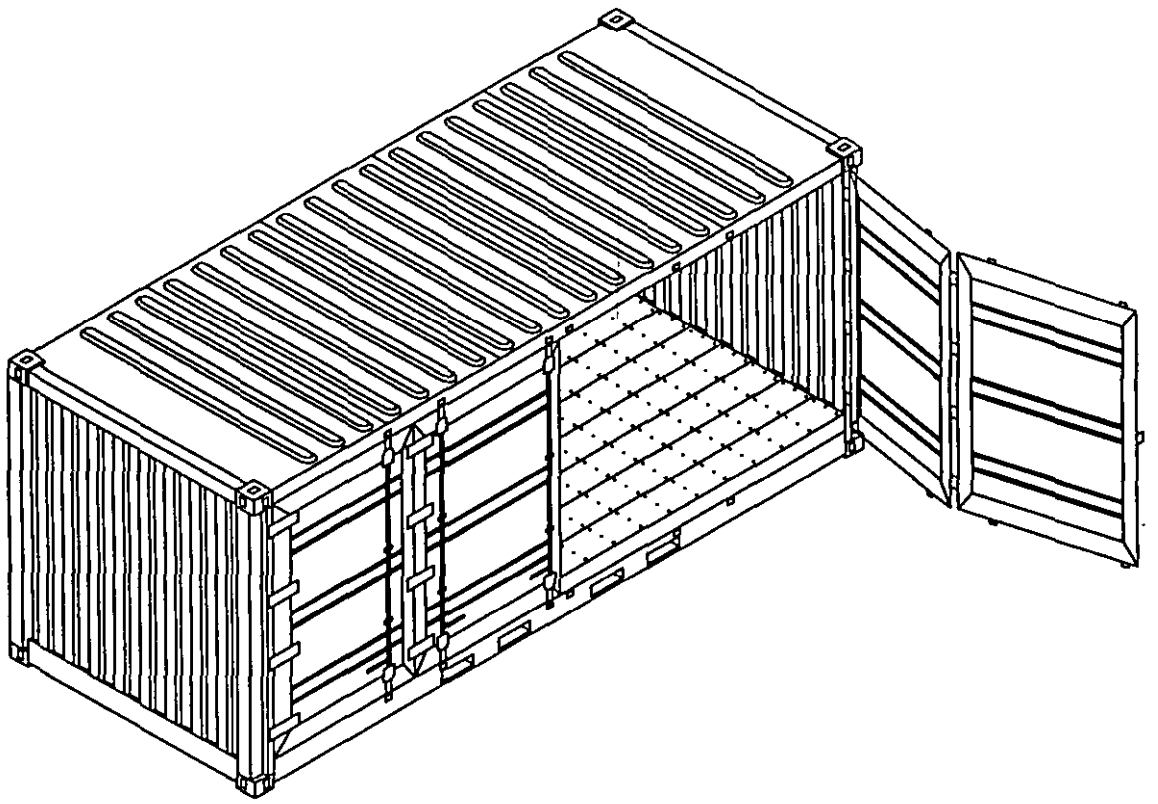

FIGURE 3.4 - TYPICAL SIDE-OPENING CONTAINER

3.5 Typical Open-Top Container. See Figures 3.5A and 3.5B. An open-top container is similar in all respects to a typical steel container except it has no rigid roof but instead has a flexible or removable cover. The removable cover (tarp) is usually made of canvas or reinforced vinyl material and is supported on movable or removable roof bows. The tarp has reinforced eyelets in the perimeter that fit (nest) over corresponding loops welded to the top rails of the container. The tarp is secured by a plastic sheathed wire rope threaded through the welded steel loops. An open-top container may also have a movable or removable door header to facilitate access to the cargo. In some open-top containers, the end door opens downward to function as a loading ramp. Some open-top containers have all steel floors. Three typical heights for open-top containers are 4 feet 3 inches high (half high), 5 feet 8 inches high (two-thirds high), and 8 feet 6 inches high (full high). Performance specifications for a typical half-high open-top container are provided by commercial item description A-A-52033.

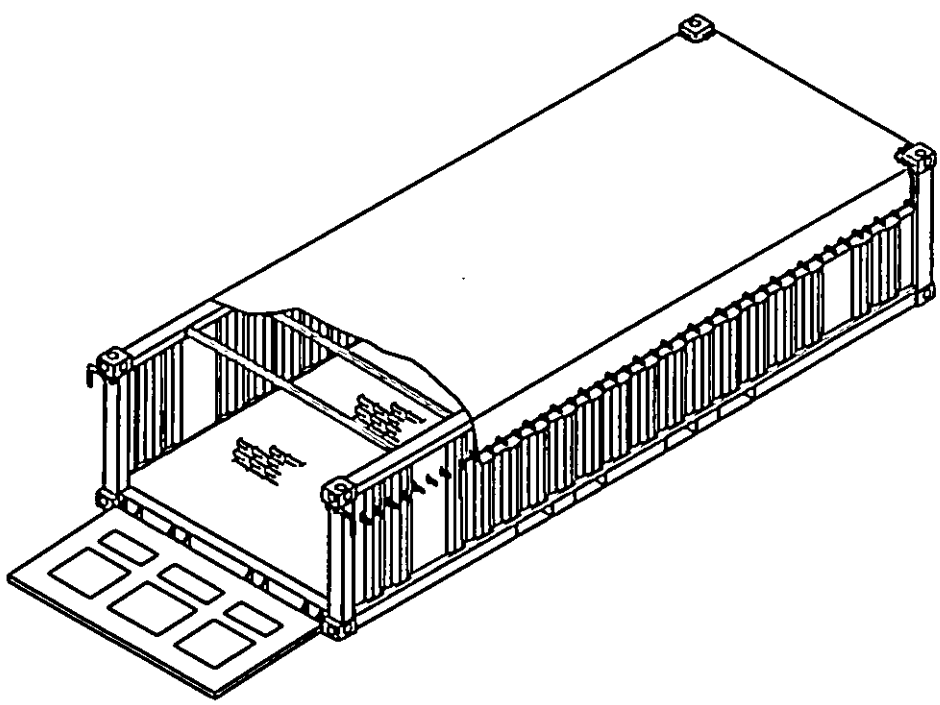

FIGURE 3.5A - TYPICAL 1/2 HIGH OPEN-TOP CONTAINER

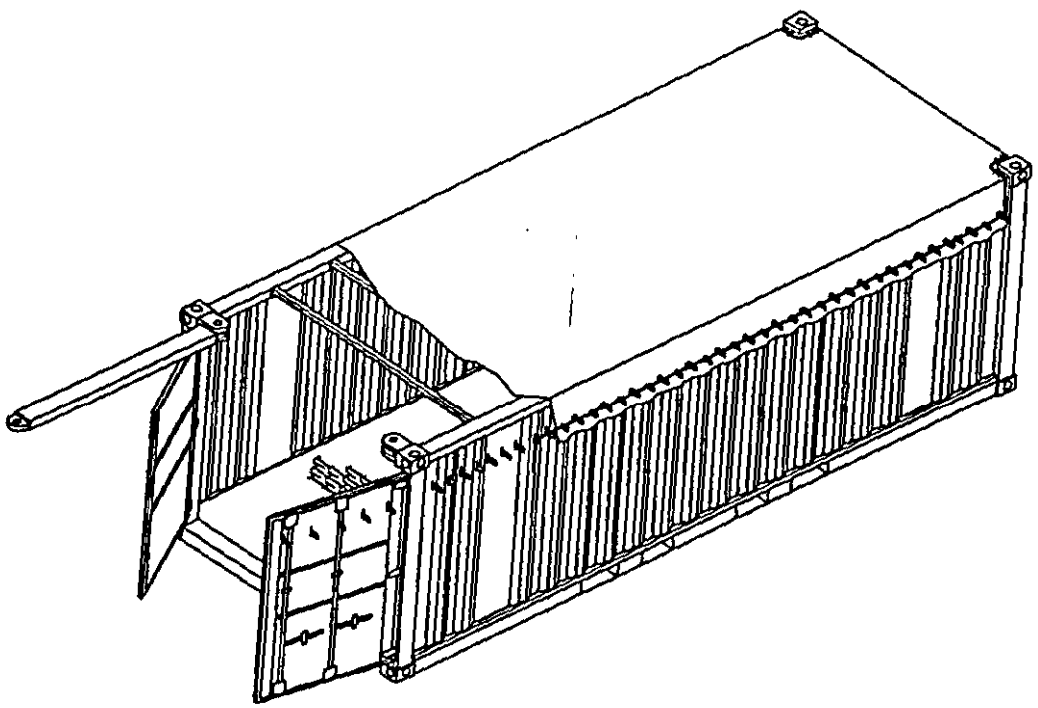

FIGURE 3.5B - TYPICAL 2/3 HIGH OPEN-TOP CONTAINER

3.6 Typical Flatrack Container. See Figure 3.6. The nominal dimensions and many construction details of a flatrack container are similar to those of a typical steel container except it does not have rigid side walls or a roof structure. A flatrack container is configured with eight internationally standard corner fittings, a substantial platform (understructure), and two end wall assemblies that may either be of fixed construction or folding design. Flatracks used to ship ammunition must have paneled end walls. Components of the flatrack container such as the lower rails of the platform and the corner posts of the end wall assemblies are of a heavier construction than the corresponding components of a closed type container. Stake pockets (stanchions) and cargo tiedown provisions are usually provided along the side rails to facilitate blocking and bracing of cargo. The flooring is usually either soft or hard wood planking that is specially treated and either screwed or bolted to the cross members. The planking may be intentionally configured with gaps between boards to allow drainage. A flatrack container does not provide weather protection.

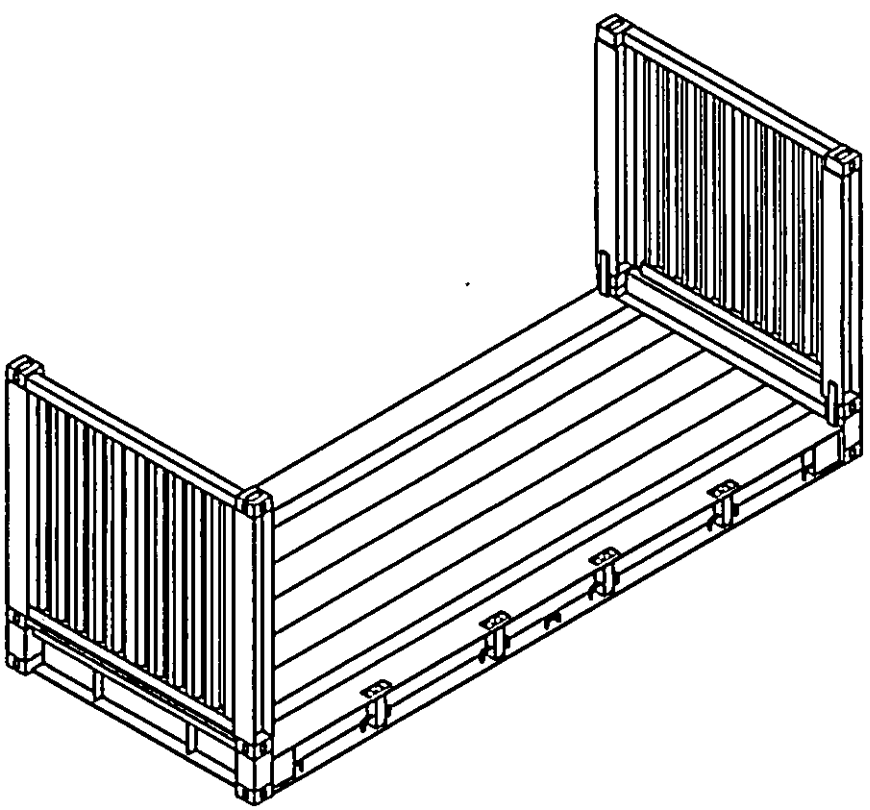

FIGURE 3.6 - TYPICAL FLATRACK CONTAINER

4. CONTAINER TERMINOLOGY

4.1 Primary Structural Components. See Figure 4.1.

4.1.1 Corner Fitting. Internationally standard fitting (casting) located at the eight corners of the container structure to provide means of handling, stacking and securing containers. Specifications are defined in ISO 1161.

4.1.2 Corner Post. Vertical structural member located at the four corners of the container and to which the corner fittings are joined.

4.1.3 Door Header. Lateral structural member situated over the door opening and joined to the corner fittings in the rear end frame.

4.1.4 Door Sill. Lateral structural member at the bottom of the door opening and joined to the corner fittings in the rear end frame.

4.1.5 Rear End Frame. The structural assembly at the rear (door end) of the container consisting of the door sill and header joined at the rear corner fittings to the rear corner posts to form the door opening.

4.1.6 Top End Rail. Lateral structural member situated at the top edge of the front end (opposite the door end) of the container and joined to the corner fittings.

4.1.7 Bottom End Rail. Lateral structural member situated at the bottom edge of the front end (opposite the door end) of the container and joined to the corner fittings.

4.1.8 Front End Frame. The structural assembly at the front end (opposite the door end) of the container consisting of top and bottom end rails joined at the front corner fittings to the front corner posts.

4.1.9 Top Side Rail. Longitudinal structural member situated at the top edge of each side of the container and joined to the corner fittings of the end frames.

4.1.10 Bottom Side Rail. Longitudinal structural member situated at the bottom edge of each side of the container and joined to the corner fittings to form a part of the understructure.

4.1.11 Cross Member. Lateral structural member attached to the bottom side rails that supports the flooring.

4.1.12 Understructure. An assembly consisting of bottom side and end rails, door sill (when applicable), cross members and forklift pockets.

4.1.13 Forklift Pocket. Reinforced tunnel (installed in pairs) situated transversely across the understructure and providing openings in the bottom side rails at ISO prescribed positions to enable either empty capacity or empty and loaded capacity container handling by forklift equipment.

4.1.14 Forklift Pocket Strap. The plate welded to the bottom of each forklift pocket opening.

4.1.15 Gooseneck Tunnel. Recess in the front portion of the understructure to accommodate transport by a gooseneck chassis. This feature is more common in forty foot and longer containers.

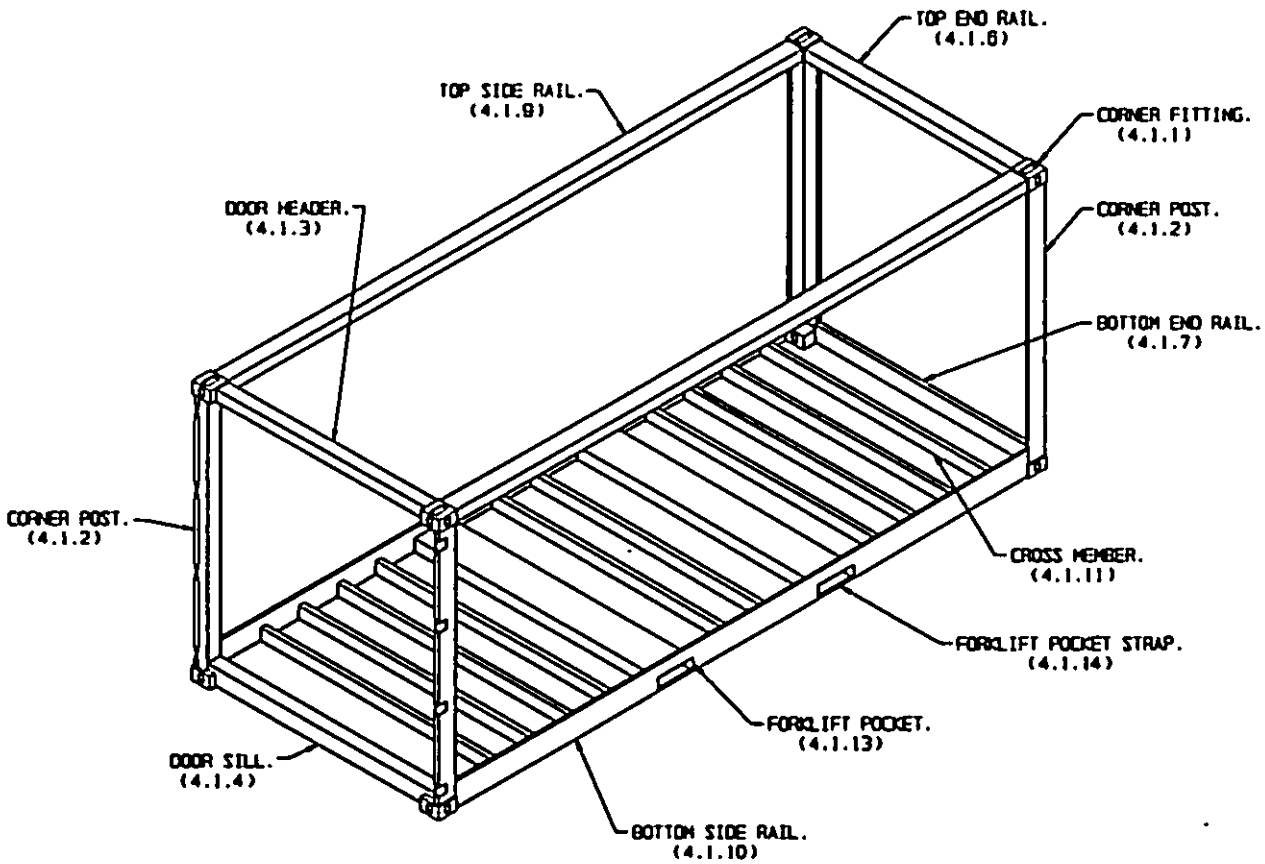

FIGURE 4.1 - PRIMARY STRUCTURAL COMPONENTS

4.2 Walls, Roof, and Floor. See Figures 4.2A, 4.2B, 4.2C and 4.2D.

4.2.1 Fiberglass Reinforced Plywood (FRP). A material constructed of laminates of fiberglass, polyester resins, and plywood. See Figure 4.2C.

4.2.2 Wall Panel. Corrugated sheet steel, a riveted aluminum sheet and wall post assembly, or FRP material that forms the side wall or end wall.

4.2.3 Wall Post. Interior or exterior intermediate vertical component to which sheet aluminum or steel is riveted or welded to form a wall panel.

4.2.4 Marking Panel. A panel of a corrugated steel side wall configured with a flat portion used for the display of markings.

4.2.5 Lining. Plywood or other like material attached to the interior side and end wall to protect the walls and/or cargo and facilitate loading operations.

4.2.6 Lining Shield. A relatively narrow strip of thin metal installed at the bottom of the interior walls to protect the lower portion of the lining from damage by materials handling equipment during loading or unloading operations.

4.2.7 Kick Plate. A common name for a lining shield installed on the lower portion of the interior front end wall.

4.2.8 Ventilator. A device permanently attached to the side or end wall panel that provides openings for the exchange of air (but not water) between the outside and the container interior.

4.2.9 Roof Panel. Corrugated or flat sheet steel, sheet aluminum, or FRP panel that forms the top closure of the container.

4.2.10 Roof Bow. Lateral structural member attached to the top side rails and supporting the underside of the roof panel or tarp. Not all container designs require roof bows.

4.2.11 Roof Reinforcement Plate. An additional metal plate on the exterior of the roof panel adjacent to the top corner fittings that provides protection of the roof panel or top rail components from misaligned handling equipment.

4.2.12 Tarp. Jargon for "tarpaulin" which is a waterproof and flexible fabric used for covering the top of an open-top container. This covering is referred to as a "Tilt" in some countries.

4.2.13 TIR Cable. Plastic sheathed wire rope that is designed in accordance with TIR customs convention (see paragraph 4.5.6) and is threaded through the welded loops on the top rails of an open-top container to secure the tarp.

4.2.14 Flooring. Material that is supported by the cross members and bottom rails to form a load bearing surface for the cargo. The flooring is usually constructed of laminated wood planks, plywood sheets, or other composition material and is screwed or bolted to the cross members. Some containers have welded steel flooring or a combination of steel and wood.

4.2.15 Joint Strip. A formed steel or aluminum strip (usually hat-shaped section) installed between joints of the plywood sheet flooring or joints of the plywood sheet lining to help integrate and support the edges of the plywood.

4.2.16 Threshold plate. Plate forward of the door sill to protect the entrance area of the container floor. This plate is commonly referred to as a crash plate.

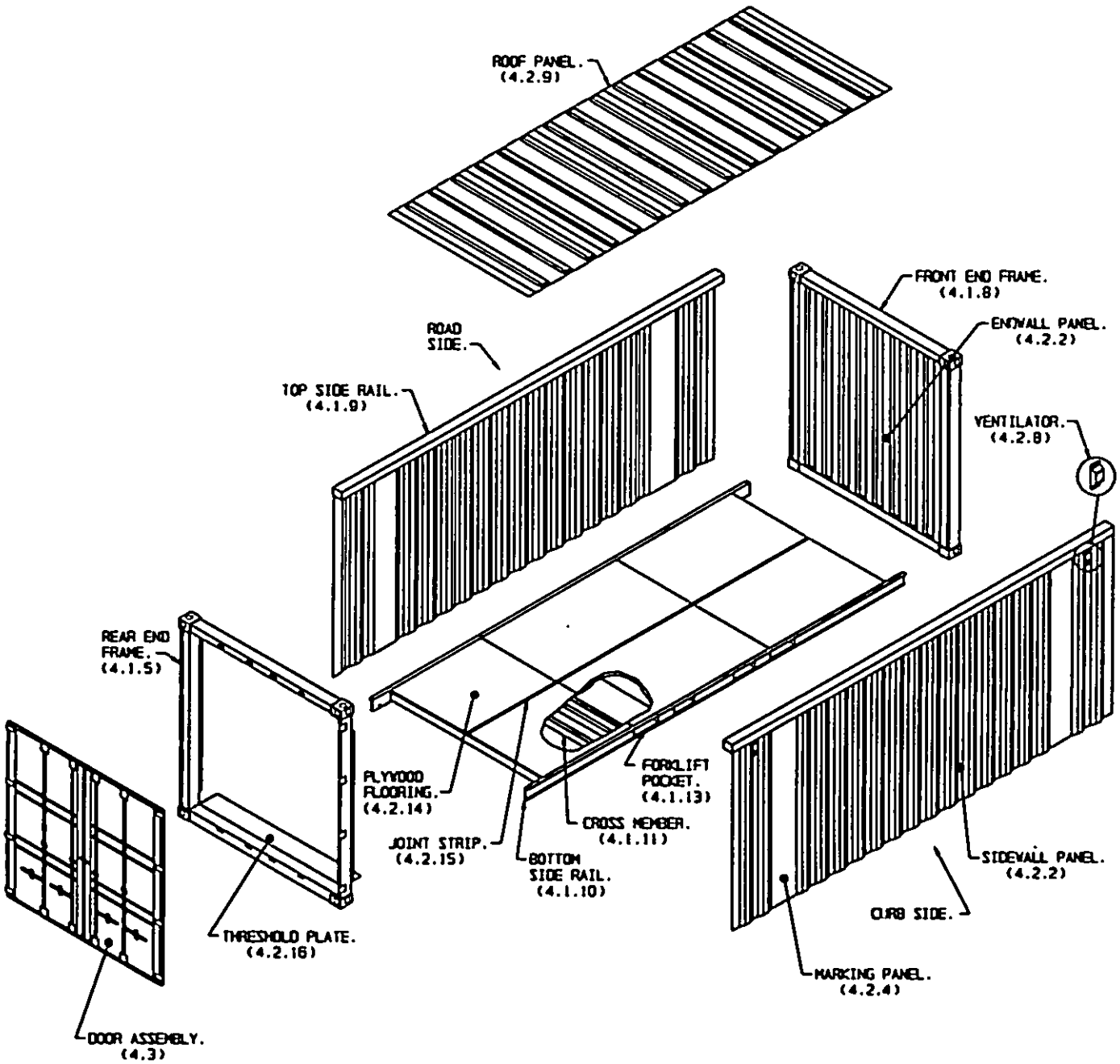

FIGURE 4.2A - TYPICAL STEEL CONTAINER (EXPLODED VIEW)

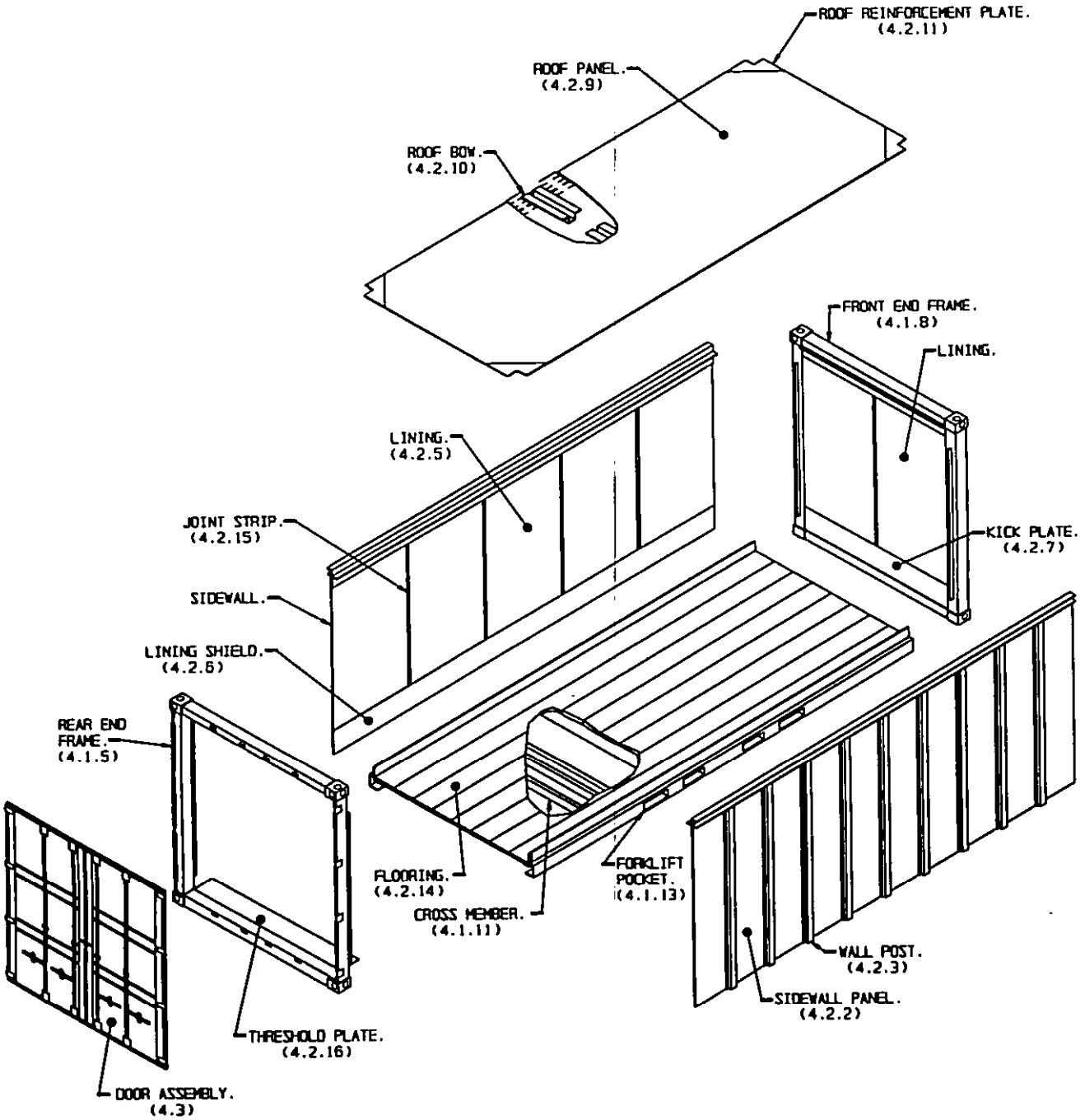

FIGURE 4.2B - TYPICAL ALUMINUM CONTAINER (EXPLODED VIEW)

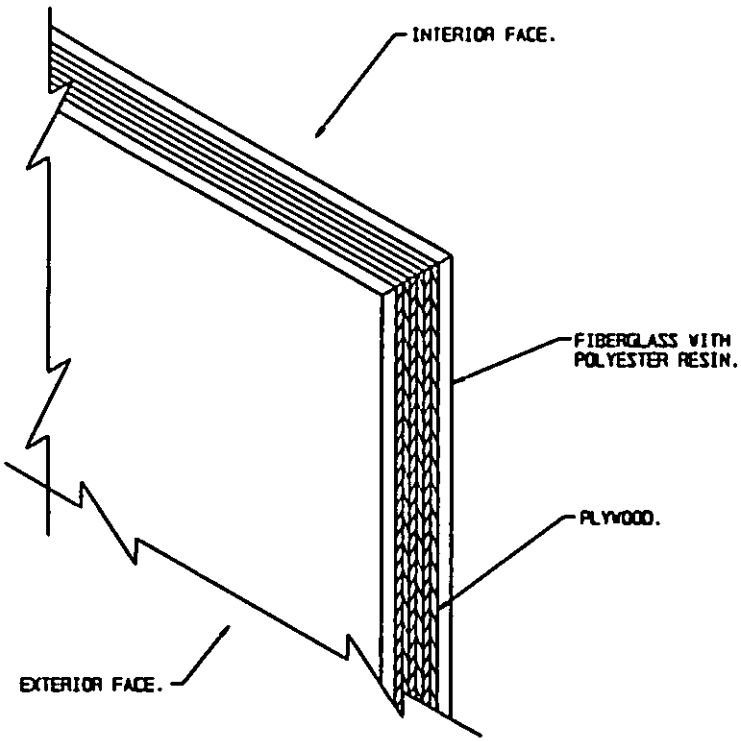

FIGURE 4.2C - FIBERGLASS REINFORCED PLYWOOD (FRP)

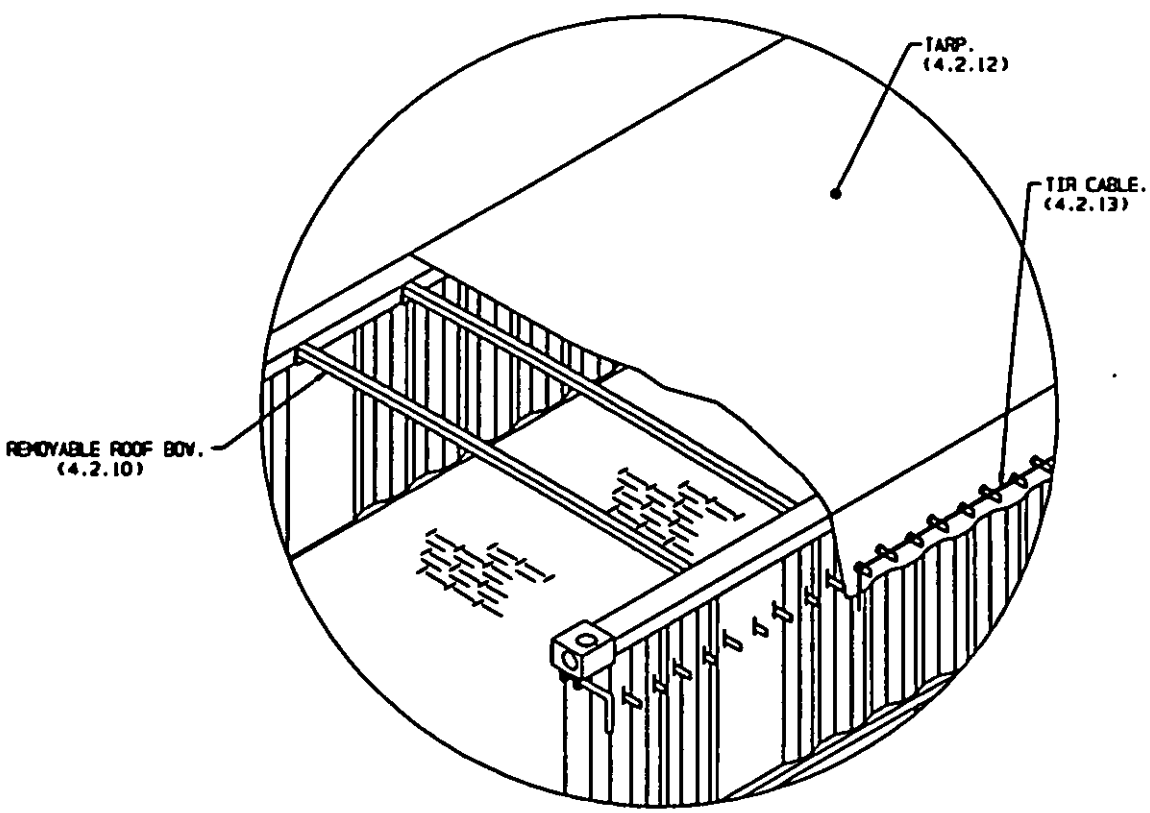

FIGURE 4.2D - REMOVABLE COVER (TARP) ASSEMBLY

4.3 Door Assembly. See Figure 4.3.

4.3.1 Door Panel. Corrugated or flat sheet steel, plymetal (metal faced wood) material, aluminum sheet and post assembly, or FRP panel that forms either a portion or all of a door.

4.3.2 J-Bar. The portion of the exterior edge of the corner post structure in a doorway frame that encircles and supports the door hinges.

4.3.3 Hinge. Hardware comprised of a blade permanently joined to the door and a lug integral to the corner post structure. A series of hinges enables the door to rotate open or closed.

4.3.4 Hinge Pin. Hinge component that attaches the two components of the hinge and provides a line of rotation. A hinge pin may be surrounded with a bushing to reduce friction and resist corrosion.

4.3.5 Hinge Pin Weld. The weld affixed on the head of the hinge pin to prevent pilferage by removing the hinge pin and door without breaking the custom seal. This is a TIR (see paragraph 4.5.6) requirement.

4.3.6 Locking Bar. Vertical rod of the door assembly with cam locks fitted at each end. When rotated, it engages (locks) the cams into the cam retainers on the doorway frame.

4.3.7 Locking Bar Mounting Bracket. One of the brackets that holds the locking bars in place on the door assembly.

4.3.8 Cam. Fitting on each end of a locking bar that has offset protrusions. Through lever type action, it engages (locks) into a cam retainer to secure the door to the doorway frame.

4.3.9 Cam Retainer. Female component (retainer) located on the sill and header of the rear end frame or top and bottom side rails of a side opening container. It engages and retains the cam of a locking bar.

4.3.10 Door Locking Handle. Handle attached to the door locking bar that rotates the bar (rod) when opening or closing (locking) the container door.

4.3.11 Door Locking Handle Retainer. Pivoting hardware to hold the locking handle in the closed position and provide a means to place a lock and/or security seal on the door(s).

4.3.12 Anti-rack Hardware. Hardware attached to the doors and doorway frame to provide resistance against transverse twisting (racking) of the container. It consists of locking bars, locking bar mounting brackets, cams, cam retainers, locking handles, handle retainers and other support brackets.

4.3.13 Customs Catch. Rod or plate permanently affixed near middle of door to preclude one door opening without opening the other door. Customs catch is only required if door design does not provide a metal overlap as defined by the TIR convention (see paragraph 4.5.6).

4.3.14 Door Seal (Gasket). Flexible plastic, rubber or synthetic rubber attached to the door edges with a retaining strip and fasteners to provide a water proof seal between doors and between the doors and the door frame.

4.3.15 Rain Gutter. The structure attached to the door header on some containers to divert water away from the doorway frame.

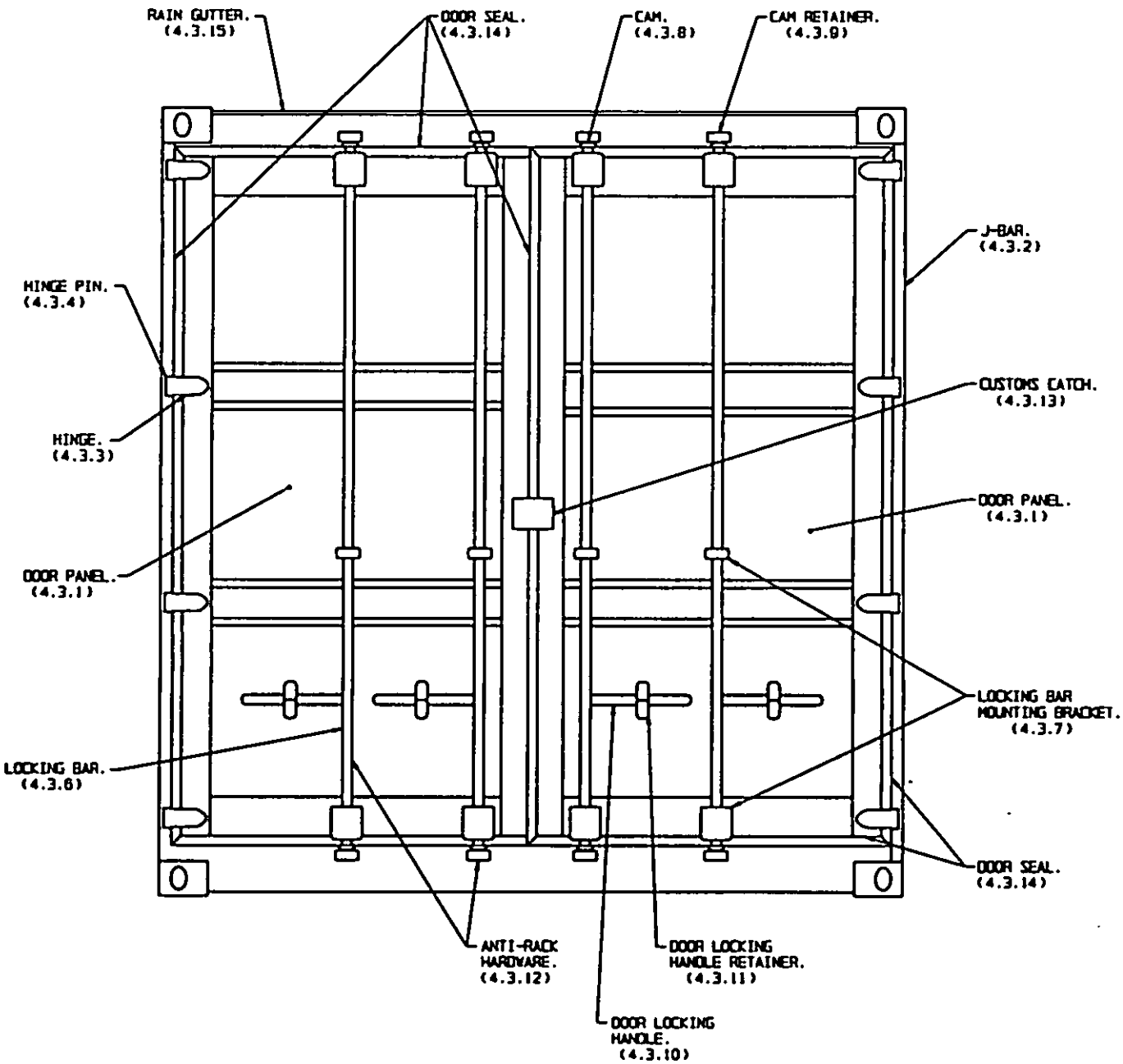

FIGURE 4.3 - TYPICAL REAR END DOOR ASSEMBLY

4.4 Special Terminology. See Figures 4.4A, 4.4B, 4.4C and 4.4D.

4.4.1 Intermodal. Specially designed to facilitate the carriage of goods by one or more modes of transport without requiring intermediate reloading and so equipped with ISO standard corner fittings to permit ready handling from one mode to the other.

4.4.2 MILVAN. A military-owned demountable container conforming to military specification MIL-C-52661 for cargo containers. A MILVAN is an ISO standard 1496 series 1 intermodal freight container with nominal dimensions of 8 feet wide by 20 feet long. A MILVAN can be either a Type I (8 feet high with plywood liner), Type II (8 feet high with mechanical restraint system), Type III (8-1/2 feet high with plywood liner), or Type IV (8-1/2 feet high with mechanical restraint system).

4.4.3 Cargo Restraint. Restraint fixtures or material that facilitate cargo securement within the container during handling and transport.

a. Mechanical Restraint System. A type of cargo restraint such as in a Type II or Type IV MILVAN that consists of eight slotted horizontal rails intermittently spaced and welded on each side wall of the container, a pair of slotted vertical rails welded to the door frame, and 25 independent shoring beam assemblies with end fittings that interlock into the slots of the rails.

b. Dunnage. Additional restraint materials installed around cargo to prevent shifting and/or damage of the cargo items during shipment.

c. Load Bearing Surface. A smooth rigid surface on the primary structure of the container capable of withstanding dynamic loads imposed by accelerated weight of cargo during container handling and transport.

d. Load Retainer. A device or fixture such as a structural angle welded to the door corner post that provides a strong load bearing surface for cargo restraint dunnage. A pair of these are typically used in an end-opening container that is not equipped with a mechanical restraint system.

e. Tiedown Provision (Lashing Bar or Ring). Provision or fitting for attachment of straps or other cargo restraint devices.

f. Stanchion. A rectangular provision (tube) on flatrack that acts as a stake pocket for a side blocking stake or dunnage assembly.

4.4.4 Tare Weight. Weight of the empty container including all associated fittings and hardware such as a mechanical restraint system.

4.4.5 Payload. Maximum allowable weight of the contents (cargo) of a container including any additional required load blocking materials (dunnage), not normally assigned or attached to a container.

4.4.6 Maximum Gross Weight. Total permitted gross loaded weight of a container including the tare weight plus the maximum allowable payload.

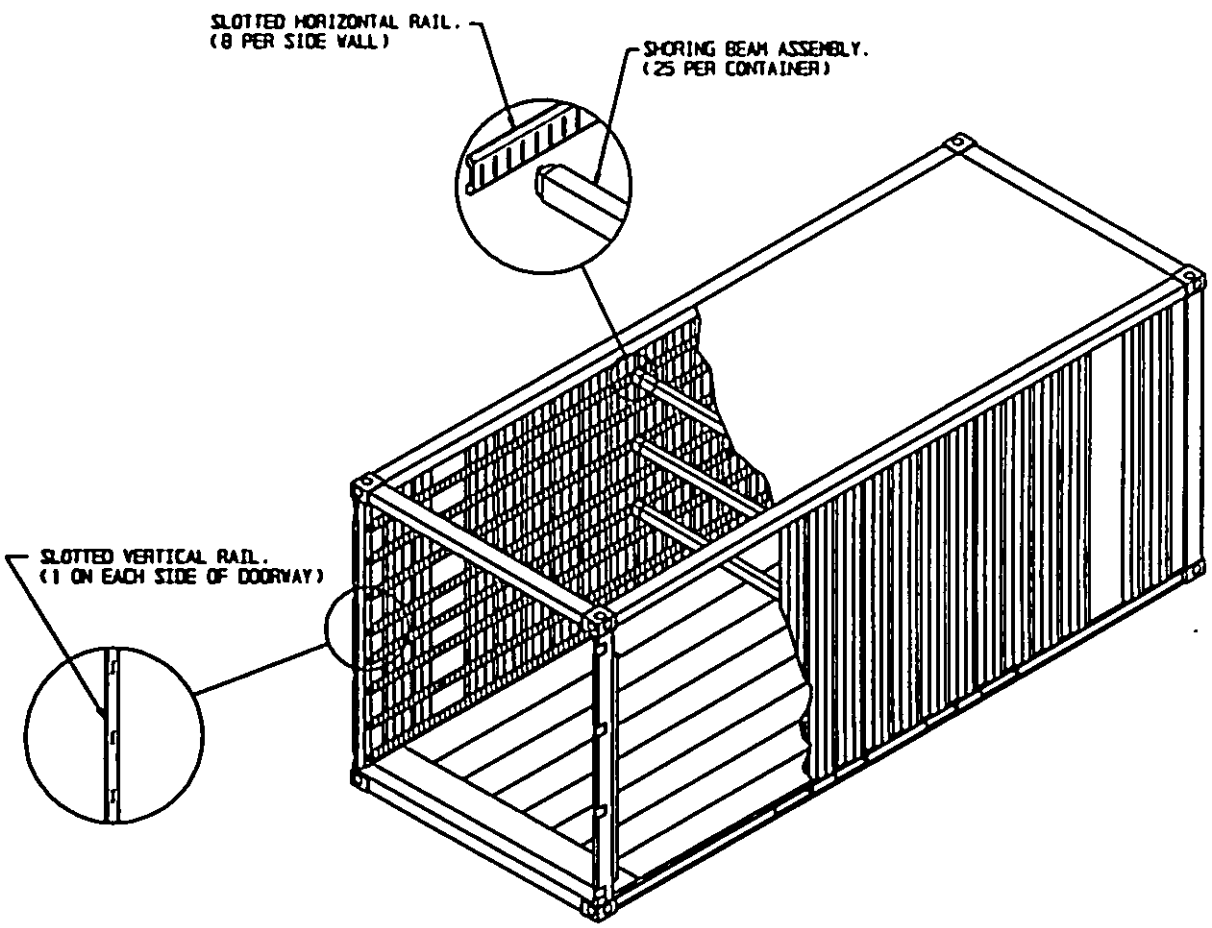

FIGURE 4.4A - MECHANICAL RESTRAINT SYSTEM FOR MILVAN

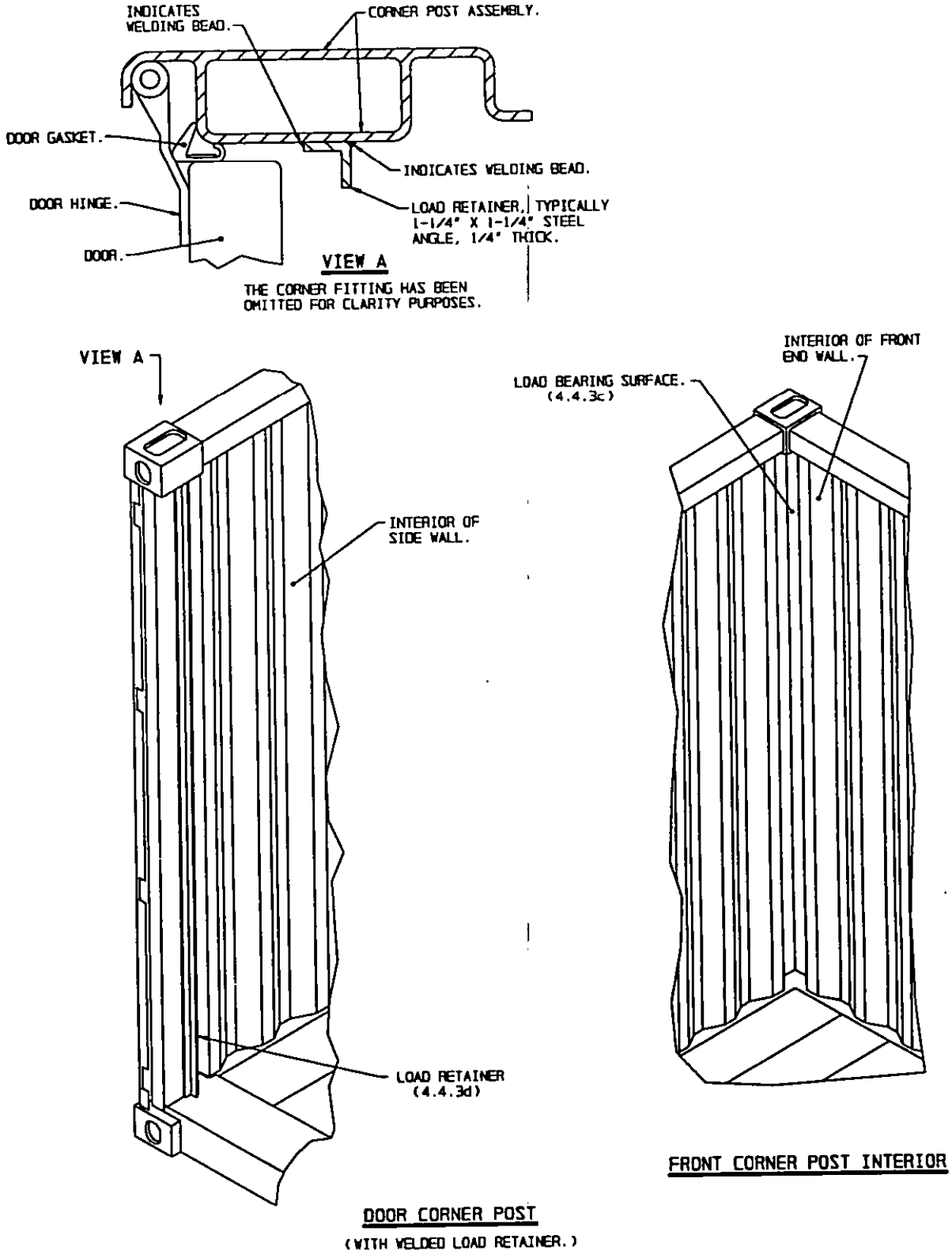

FIGURE 4.4B - CARGO RESTRAINT FOR END-OPENING CONTAINER

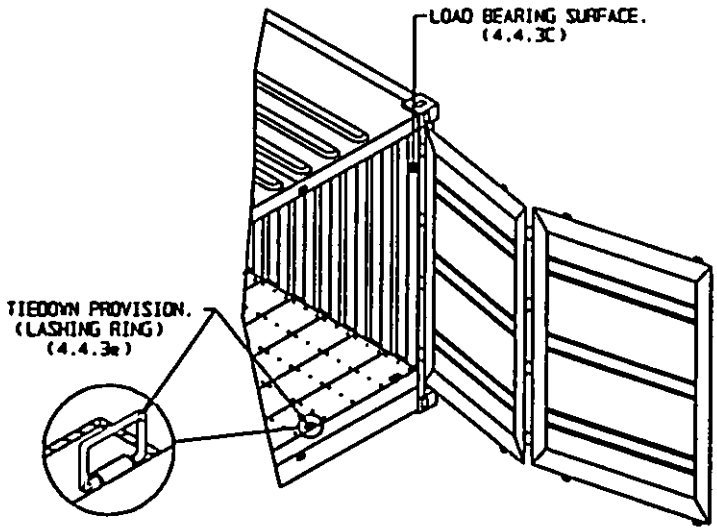

FIGURE 4.4C - CARGO RESTRAINT FOR SIDE-OPENING CONTAINER

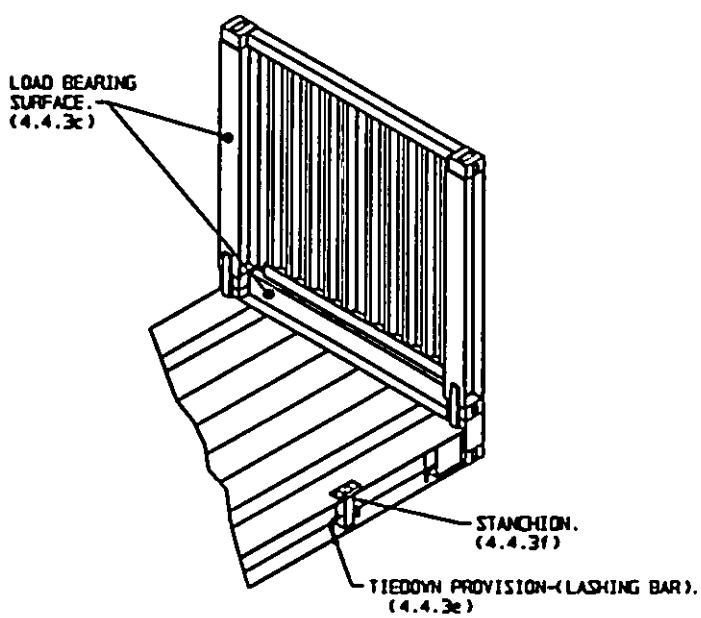

FIGURE 4.4D - RESTRAINT PROVISIONS FOR FLATRACK CONTAINER

4.5 Conventions and Markings. See Figures 4.5A, 4.5B, 4.5C, 4.5D and 4.5E.

4.5.1 ISO (International Organization for Standardization). An international organization composed of various national organizations that prescribes standards. This organization is headquartered in Geneva, Switzerland and includes many technical committees (TCs) such as ISO TC 104 for technical work involving intermodal freight containers.

4.5.2 ISO Markings. Numbers, letters, and symbols placed on a container in conformance to ISO standard 6346 to identify such items as container size, type, owner, registered serial number, tare weight, gross weight, and cubic capacity. Some ISO markings are mandatory and some are optional.

4.5.3 CSC (International Convention for Safe Containers). An international treaty that initially entered into force on 6 September 1977 requiring structural safety approval of all intermodal containers and periodic inspections of containers at specified intervals to ensure maintenance of safe condition. The CSC is administered by individual governments in accordance with the recommendations of the International Maritime Organization (IMO), a branch of the United Nations. United States implementation of CSC is mandated by CFR 49 parts 450 to 453.

4.5.4 CSC Safety Approval Plate. A durable data plate required by CSC and certified by an approved certification agency to indicate CSC approval. The "CSC Plate" may also indicate the next examination or re-inspection date. The required format of the CSC Plate is depicted in Figure 4.5D. The information on the plate must be inscribed in at least the English or French language.

4.5.5 ACEP (Approved Continuous Examination Program). An alternative to scheduling periodic examinations of containers. This program also complies with CSC requirements and although not used by DOD, is used by many commercial owners. An ACEP marking on the container indicates date that this method of examination was initially approved, not date of next required re-inspection.

4.5.6 TIR (Transport Internationale des Routiers). An international customs convention providing transport approval under regulation of customs authorities of different nations. TIR approval usually permits sealed containers to cross international borders without inspection.

4.5.7 TIR Markings or Plate. Markings or data plate identifying that container design has been certified to meet TIR requirements.

4.5.8 TCT (Timber Component Treatment). An immunization of exposed wooden components in compliance with Plant Quarantine requirements of the Australian Department of Health.

4.5.9 UIC (Union Internationale des Chemins de Fer). Organization primarily of European railroads that establishes standards for container transport on member railroads.

4.5.10 Manufacturer's Data Plate. A plate affixed to the container identifying manufacturer, date of manufacture, and other pertinent container design data.

4.5.11 Consolidated Data Plate. A single plate affixed to the container that consolidates all container data and approval information without violating individual data format requirements.

4.5.12 Placard Holder. Fixture used to display placards that identify hazardous material classification of ammunition cargo being shipped.

4.5.13 Magazine Stowage Type A. Type of ship stowage designation for certain hazardous materials as defined by the IMDG Code and CFR 49 part 176.130. This type of stowage is typically designated for bulk type powders or bulk type initiating explosives. A container meets requirements for "Magazine Stowage Type A" if its floor consists of tightly fitted wooden boards, plywood or equivalent non-metallic material and it has non-metallic wall lining.

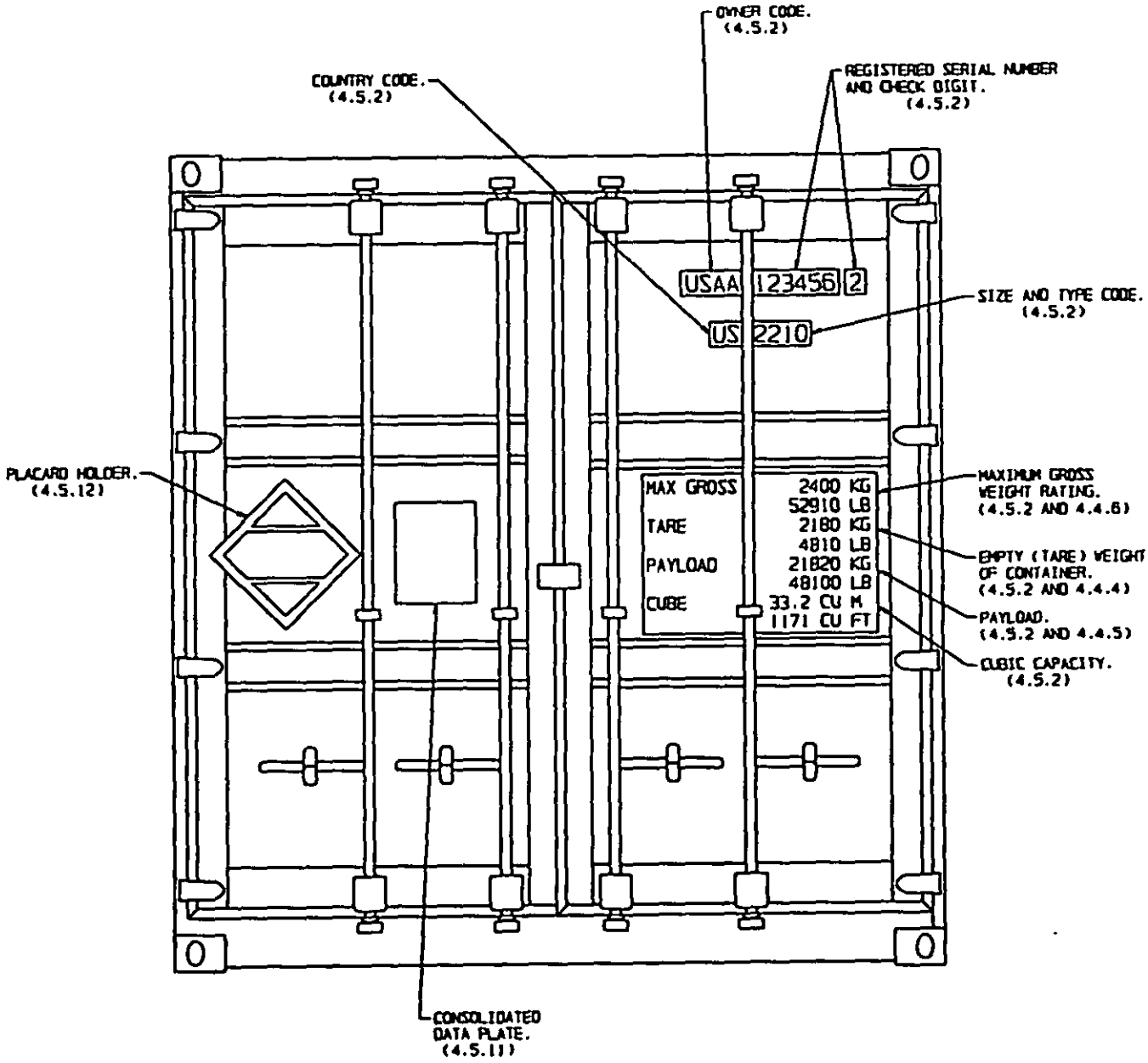

FIGURE 4.5A - TYPICAL DOOR MARKINGS

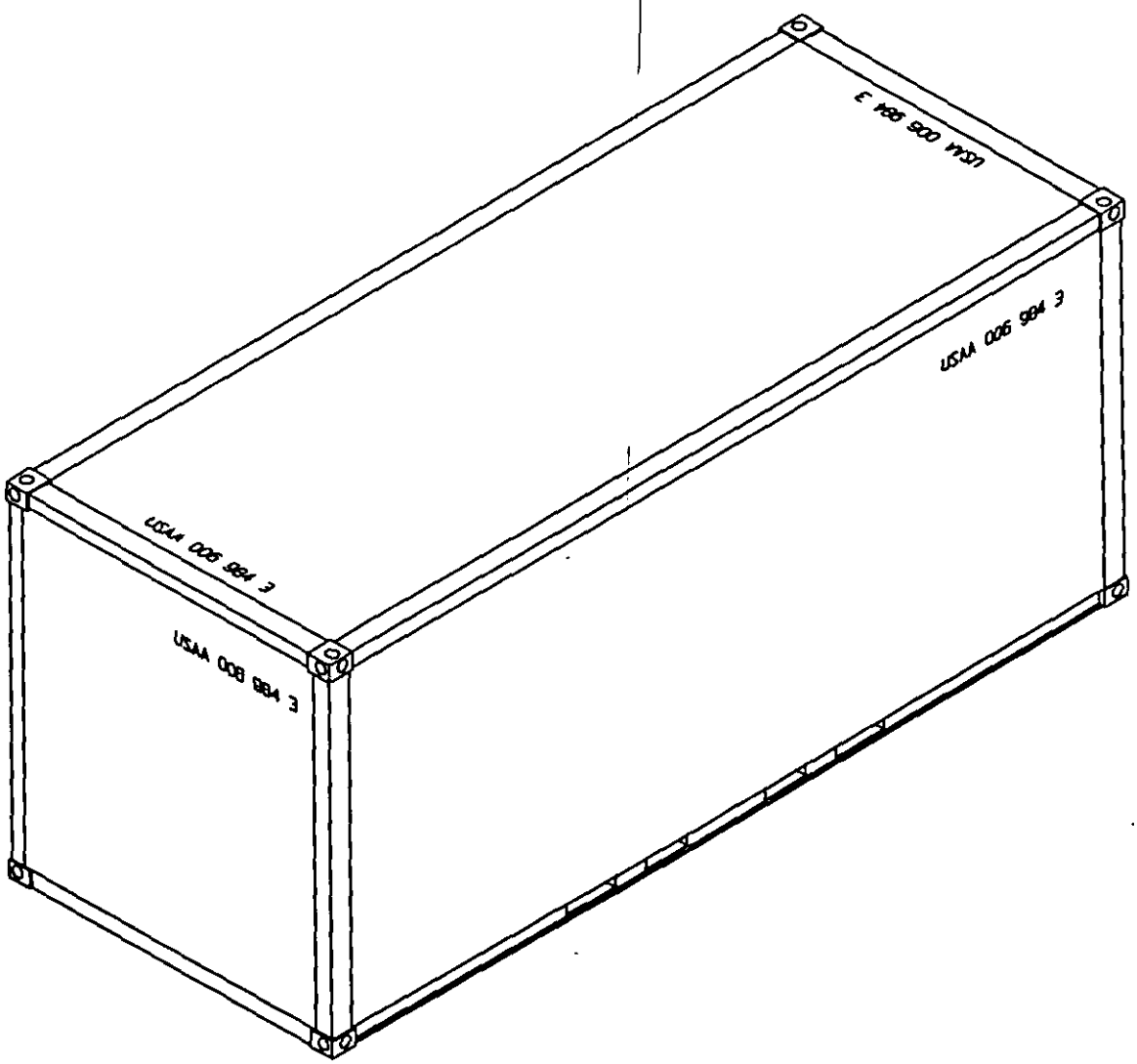

FIGURE 4.5B - TYPICAL HORIZONTAL LAYOUT OF ISO IDENTIFICATION MARKINGS

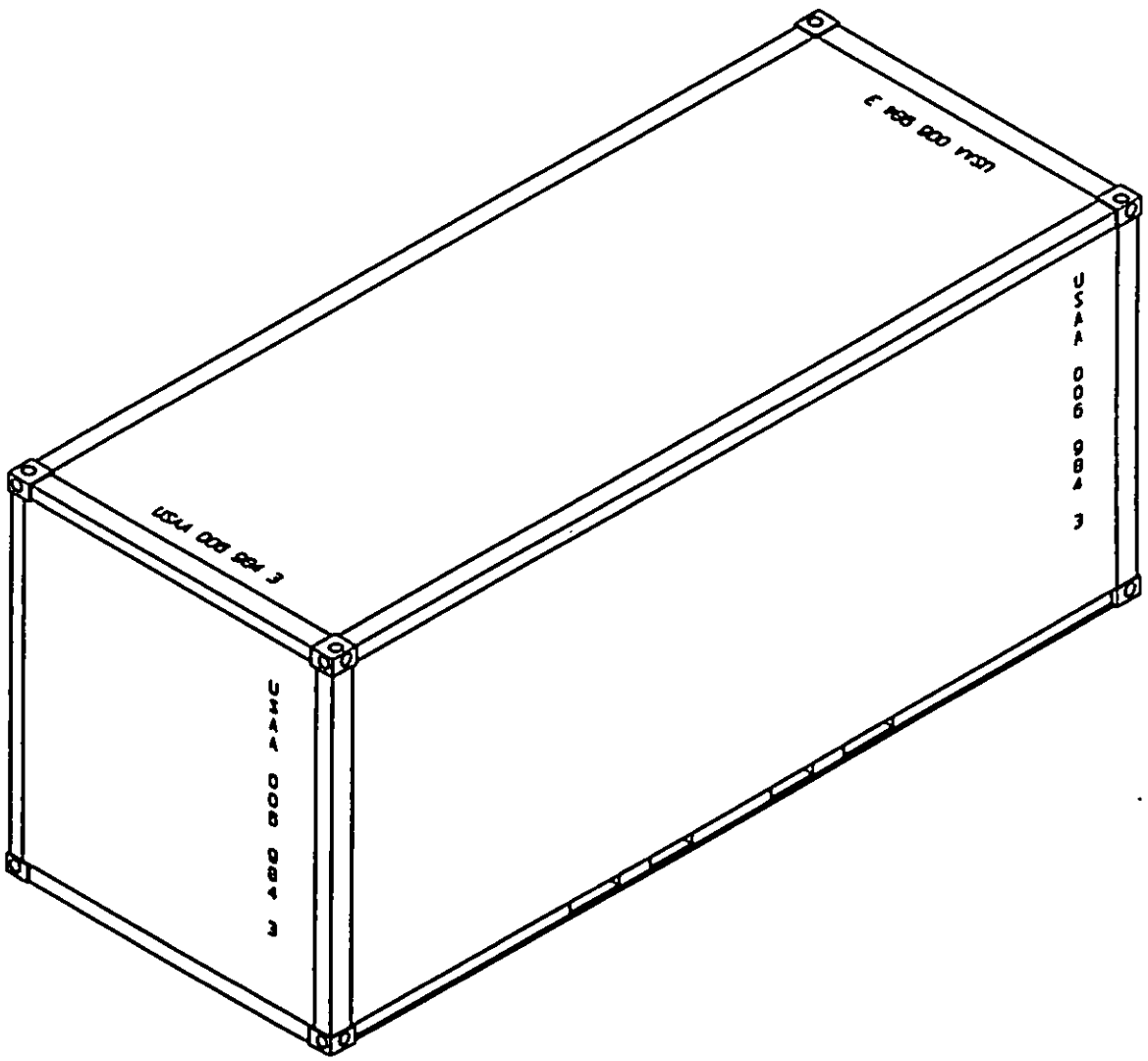

FIGURE 4.5C - TYPICAL VERTICAL LAYOUT OF
ISO IDENTIFICATION MARKINGS

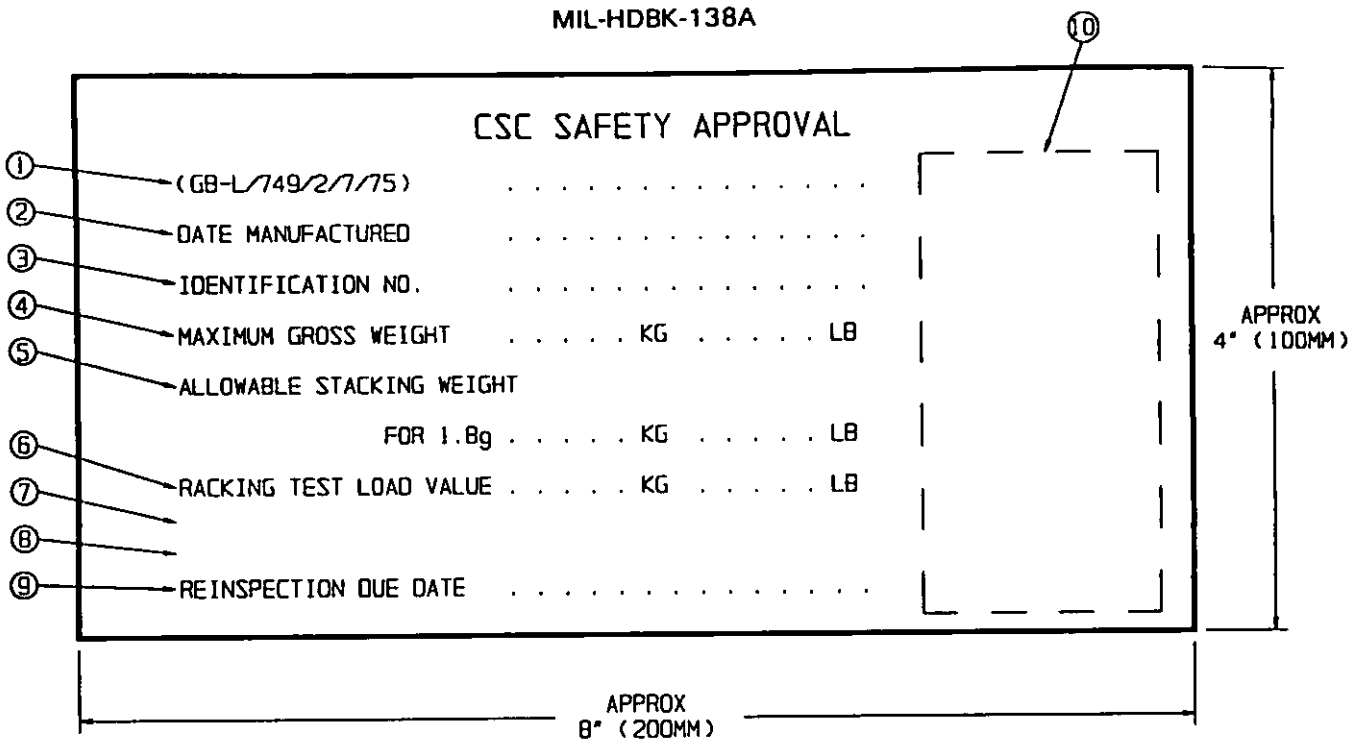

REQUIRED LINES OF INFORMATION:

1. Alphanumeric reference code similar to example shown above indicating Country of approval and reference number for approval.

2. Date (month and year) of manufacture.

3. Manufacturer's identification number or the ISO identification number (i.e., owner code, serial number and check digit) assigned to the container.

4. Maximum gross weight rating (kilograms and pounds).

5. Allowable stacking weight (kilograms and pounds) container can support when subjected to 1.8 times the force of gravity.

6. Transverse racking test load value (kilograms and pounds).

7. End wall strength expressed in kilograms and pounds or as fraction of the permissible payload (P). This is only required to be marked on the CSC plate if end walls are designed to withstand a load of less than or greater than 0.4P.

8. Side wall strength expressed in kilograms and pounds or as fraction of the permissible payload (P). This is only required to be marked on the CSC plate if side walls are designed to withstand a load of less than or greater than 0.6P.

9. First re-inspection due date (month and year) for new container or DD Form 2282 decal indicating subsequent re-inspection due date (month and year).

10. Alternate location on CSC plate for application of DD Form 2282 decal.

FIGURE 4.5D - FORMAT OF CSC PLATE

APPROX 8" (200MM)

APPROX 11" (280MM)

APPROVED FOR TRANSPORT
UNDER CUSTOMS SEAL

USA/775-AB/91

TYPE 102S/2

MANUFACTURER'S NO. OF THE CONTAINER ABC 1575

OWNED BY
U.S. ARMY
5611 COLUMBIA PIKE
FALLS CHURCH, VA 22041

TIMBER TREATMENT
CHLORDANE GLUELINE METHOD

APPROVED BY AMERICAN BUREAU
OF SHIPPING AB/775/91

MANUFACTURED BY
ABC COMPANY
ANYWHERE, USA

CSC SAFETY APPROVAL

USA/775-AB/91

DATE MANUFACTURED	AUGUST 1991			
IDENTIFICATION NO.	USAA 123456-2			
MAXIMUM GROSS WEIGHT	24000	KG	52910	LB
ALLOWABLE STACKING WEIGHT FOR 1.8g	192000	KG	423280	LB
RACKING TEST LOAD VALUE	15240	KG	33600	LB
REINSPECTION DUE DATE	AUGUST 1996			

FIGURE 4.5E - TYPICAL CONSOLIDATED DATA PLATE

4.6 Damage and Repair. See Figures 4.6A, 4.6B, 4.6C and 4.6D.

4.6.1 Patch. Any repair of a wall, roof, or door panel that adds or replaces material without complete replacement of the panel. An acceptable patch is of permanent design, of similar material and configuration, and weather-proof. Patch is a generic repair term, which for purposes of this inspection criteria, is reserved exclusively for repairs on non-primary components such as wall, roof, or door panels.

4.6.2 Splice. Any repair of a primary (main) structural component (member) that replaces material without complete replacement of the member. Gussets, backup plates or other *reinforcement (protector)* plates are not to be construed as splices. Splice is a regulatory repair term, which for purposes of this inspection criteria, is reserved exclusively for repairs on components of the primary structure.

4.6.3 Gusset. Reinforcement plate, usually triangular in shape, welded between adjacent components to reinforce the structure and provide added resistance to handling damage.

4.6.4 Backup Plate. A reinforcement (doubler) plate installed on the backside of a structural component and not on the exterior of the component's profile. The backup plate serves to stiffen and strengthen the component.

4.6.5 Insert. A specific type of repair in which replacement material is fitted flush with the original component and only a partial profile of the component's cross section is replaced.

4.6.6 Section. A specific type of repair in which replacement material is fitted flush with the original component and the entire profile of the component's cross section is replaced.

4.6.7 Hole. A circular penetrating puncture thru any part of the container.

4.6.8 Pinhole. A small hole less than 1/8 inch (3mm) in diameter. A pinhole typically results from a tiny skip or porosity in a weld and usually is only detected during a light leak test.

4.6.9 Welder's Hammer. A hammer with a chisel shaped head used to tap on a welded joint *and/or the surface of a structural component to ascertain the strength and integrity.*

4.6.10 Corrosive Failure. Corrosive failure (galvanic or electrolytic) is determined when the corroded metal can be punctured by striking the area lightly with a welder's hammer.

4.6.11 Caulking. A sealant compound used to provide water tightness around patches in panels, around riveted seams, in holes of pop rivets, in joints between dissimilar metals, in gaps between floor board edges, and in gaps where the floor boards adjoin the interior container walls.

4.6.12 Undercoating. Bituminous material or other waterproof coating brushed or sprayed on the entire underside of the container floor to protect all the metal understructure against corrosion and to waterproof the wooden flooring.

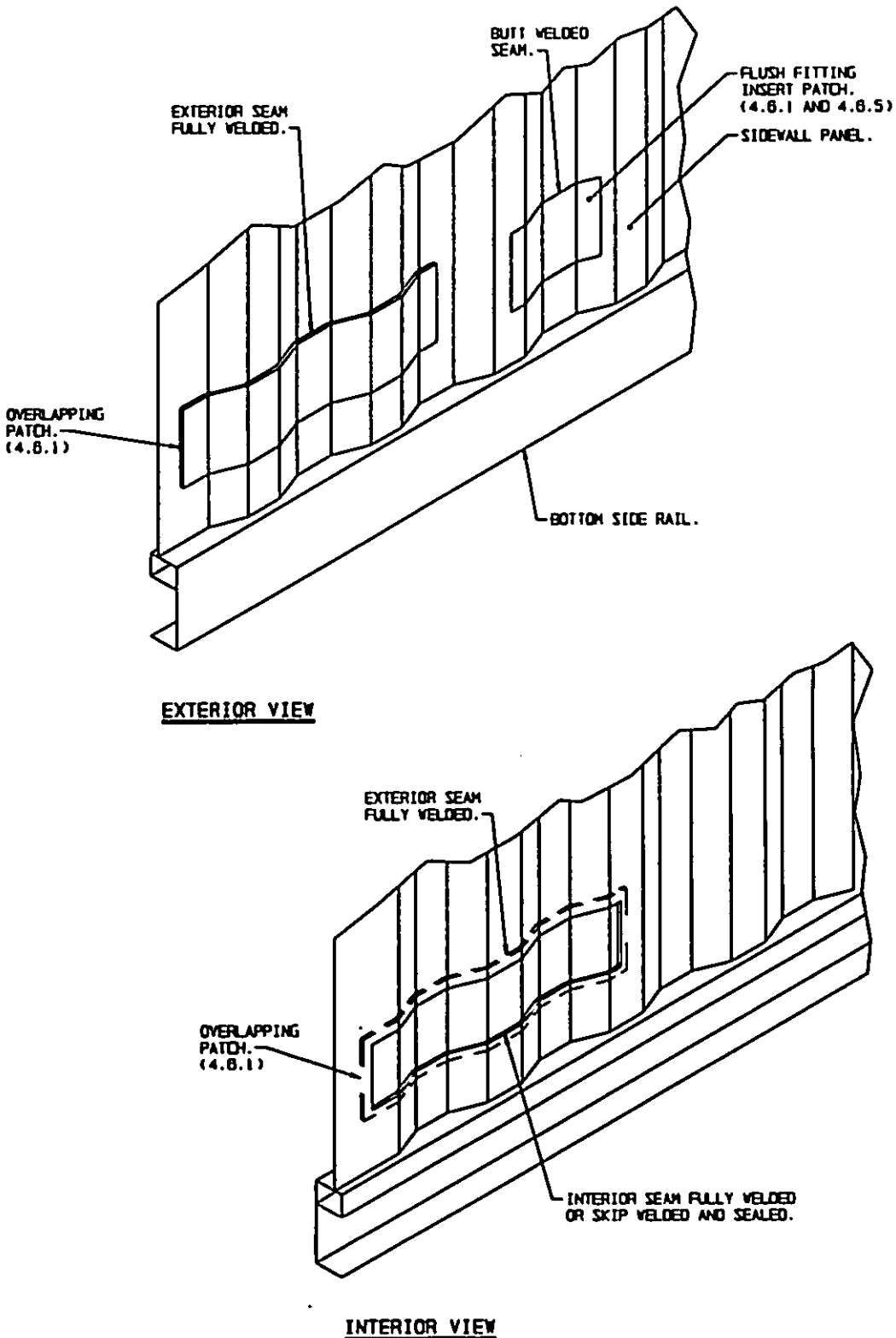

FIGURE 4.6A - TYPICAL PATCHES ON WALL

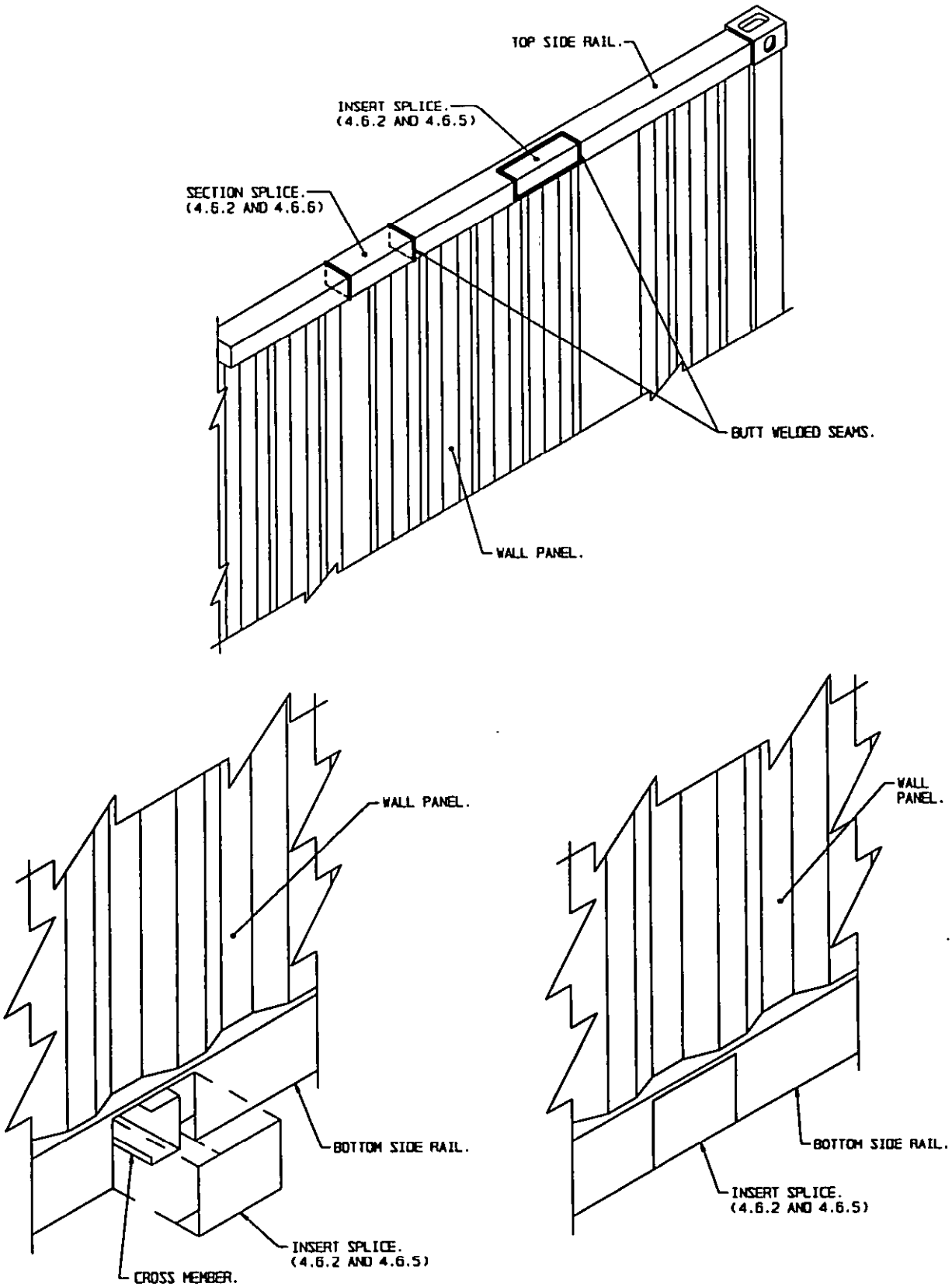

FIGURE 4.6B - TYPICAL SPLICES IN RAILS

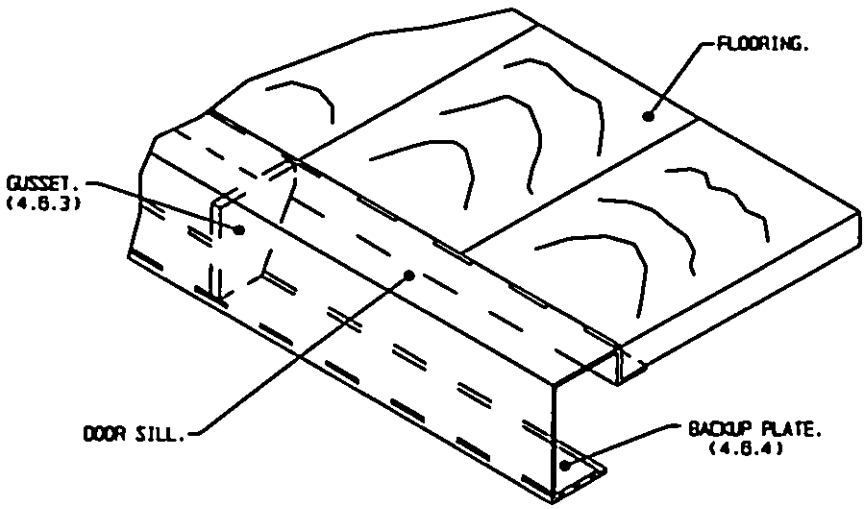

FIGURE 4.6C - TYPICAL REINFORCED DOOR SILL

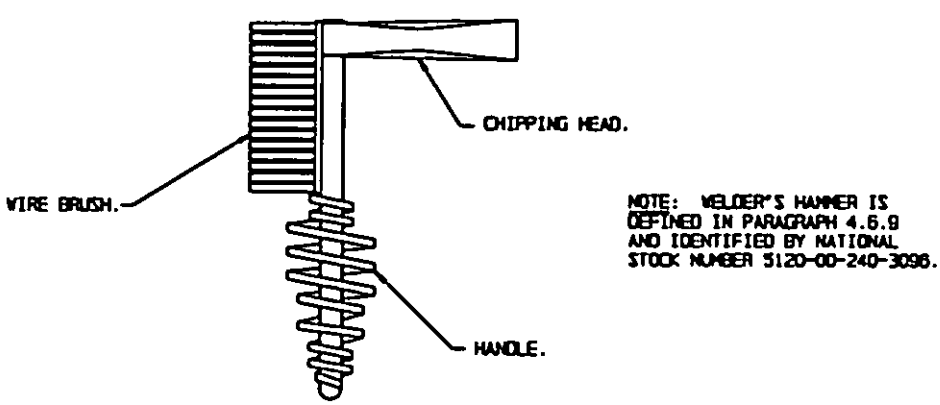

FIGURE 4.6D - WELDER'S HAMMER

5. CONTAINER INSPECTION CRITERIA

5.1 General Requirements.

5.1.1 Regulatory Mandates. An intermodal freight container may not be offered for the carriage of any type of cargo through the marine environment unless the container is structurally serviceable as evidenced by a CSC Safety Approval Plate and verified by a detailed visual examination. The CSC Safety Approval Plate and the visual examination must conform to the mandates of CFR 49, parts 450, 451, 452, and 453. Furthermore, before a freight container is loaded with cargo, it must be free of any residue of previous cargo, its interior walls and floor must be free from protrusions, and it must also meet specific structural serviceability requirements as prescribed by the IMDG Code and mandated by CFR 49 part 176.172. If a container has any safety related deficiency or damage that could place any person in danger, it shall not be used.

5.1.2 Markings and Data Plates. A container must bear legible ISO markings conforming to ISO standard 6346. A container must also bear a legible CSC Safety Approval Plate or a Consolidated Data Plate marked in accordance with CSC format requirements. Mandatory ISO identification markings (i.e., owner code, serial number and check digit) must be located on each side and each end such as depicted in Figures 4.5A and 4.5B. Mandatory ISO operational markings (i.e., tare weight and maximum gross weight) must appear on at least one location such as on the door as depicted in Figure 4.5C. The CSC data may be in any conspicuous place as long as it is securely affixed to the container and it meets CSC format requirements as depicted in either Figure 4.5D or 4.5E. All maximum gross weight markings on the container must be consistent with the maximum gross weight on the CSC plate.

5.1.3 Configuration. Any distortion of the overall configuration great enough to preclude proper engagement of handling/lifting equipment, mounting and securing on chassis or vehicle, or insertion into the cell of a ship is unacceptable. No part of the container may protrude beyond the outside surfaces of the corner fittings. The external dimensions must be within the tolerances prescribed by ISO standard 668 as depicted in Figure 5.1.

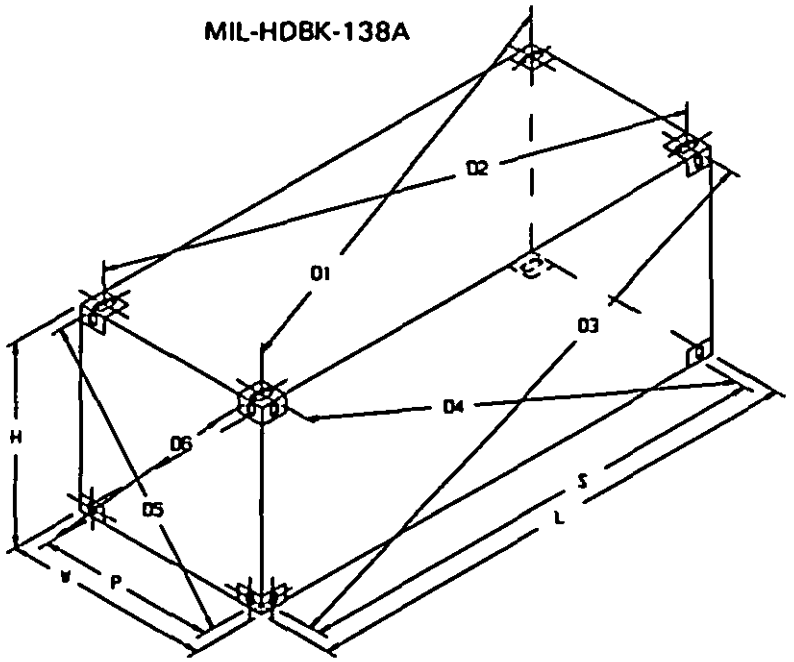

EXTERNAL DIMENSIONS AND TOLERANCES IN MILLIMETERS AND FEET AND INCHES

NOMINAL LENGTH FT	L (EXTERNAL LENGTH)			S			K1 MAX.	
	MM	FT	IN	MM	FT	IN	FT	IN
40	12,192 +0 -10	40	0 +0 -3/8	11,985 +6 -6	39	3-7/8 +1/4 -1/4	19	3/4
30	9,125 +0 -10	29	11-1/4 +0 -3/8	8,918 +6 -6	29	3-1/8 +1/4 -1/4	16	5/8
20	6,058 +0 -6	19	10-1/2 +0 -1/4	5,853 +5 -5	19	2-7/16 +3/16 -3/16	13	1/2
10	2,991 +0 -5	9	9-3/4 +0 -3/16	2,787 +4 -4	9	1-23/32 +5/32 -5/32	10	3/8

	W (EXTERNAL WIDTH)			P			K2 MAX.	
	MM	FT	IN	MM	FT	IN	FT	IN
ALL LENGTHS	2,438 +0 -5	8	0 +0 -3/16	2,259 +4 -4	7	4-31/32 +5/32 -5/32	10	3/8

NOMINAL HEIGHT FT	H (OVERALL HEIGHT)		
	MM	FT	IN
8-1/2	2,591 +0 -5	8	6 +0 -3/16
8	2,438 +0 -5	8	0 +0 -3/16
5-2/3	1,727 +0 -5	5	8 +0 -3/16
4-1/4	1,295 +0 -5	4	3 +0 -3/16

S = LENGTH BETWEEN CENTERS OF CORNER FITTING APERTURES

P = WIDTH BETWEEN CENTERS OF CORNER FITTING APERTURES

D = DISTANCE BETWEEN CENTERS OF APERTURES OF DIAGONALLY OPPOSITE CORNER FITTINGS

K1 = DIFFERENCE BETWEEN D1 AND D2 OR D3 AND D4

K2 = DIFFERENCE BETWEEN D5 AND D6

FIGURE 5.1 - ISO DIMENSIONS AND TOLERANCES

5.2 Primary Structural Components. An intermodal container with any major defect in any component of its primary structure is unacceptable. For purposes of this criteria, primary (main) structural components (members) include: corner fittings, corner posts, door sill and header, top and bottom end rails, top and bottom side rails, floor cross members, and forklift pockets.

5.2.1 Major Defects. A major defect includes:

a. A dent or bend in any primary structural component that is greater than 3/4 inch (19mm) in depth, regardless of length;

b. A crack, break, cut, tear, puncture, or corrosive failure in any primary structural component;

c. A missing, cracked, or broken weld at the juncture between any primary structural components;

d. A loose or missing fastener at the juncture between any primary structural components of an aluminum type container;

e. More than one splice or an improper splice (such as a lapped splice) in a top or bottom end rail or a door header;

f. More than two splices or an improper splice in any one top or bottom side rail;

g. More than two splices or an improper splice in any one floor cross member, including a cross member that forms a side of a forklift pocket;

h. Any splice in a door sill or corner post; or

i. Any damage or degradation within a component that could place any person in danger during subsequent handling, stacking, or transport of the intermodal container.

5.2.2 Acceptable Welding Patterns. Containers are originally deemed suitable for use if they have been given CSC certification by either American Bureau of Shipping, Germanischer Lloyd, Bureau Veritas, Registro Italiano Navale, Nippon Kaiji Kyokai, Lloyds Register of Industrial Services, Det Norske Veritas, Register of Shipping of the USSR, or Polish Register of Shipping, et al. These international agencies are highly reputable and bear the liability that the container is manufactured in accordance with ISO and CSC requirements. Welding patterns conforming to the original manufacturer's design are therefore acceptable. Only abnormal welding patterns due to damage and/or improper repair are cause for rejection. Typically, a juncture between primary structural members at a corner fitting is welded continuously on the exterior surface of the container. Rails and headers formed from tubular steel are typically welded all around the juncture (exterior and interior). There are various designs, however, that do not have a continuous weld on the interior surface. Since welding patterns may vary depending on design and manufacture, inspection should be directed at looking for broken junctures or welded repairs that are not consistent with other similar welds of that container.

5.2.3 Acceptable Splicing. For purposes of this criteria, a splice is any repair of a primary structural member that replaces material without complete replacement of the member. Areas repaired by straightening and bead welding are not to be construed as splices. Gussets, backup plates or other reinforcement (protector) plates are not to be construed as splices. An acceptable splice is a minimum of 6 inches (150mm) long and is a butt-welded insert. If a splice would end within 12 inches (300mm) of another weld, such as at the juncture with the corner fitting, it must be extended to that weld. An acceptable splice is flush fitting and restores the original size and cross-sectional profile of the repaired component. Backup plates installed on the backside of a splice are permissible if the backup plate extends a minimum of 6 inches (150mm) beyond each end of the splice.

5.2.4 Corner Fittings. See Figure 5.2.4. Corner fittings must not be distorted or cracked and must not have any worn, broken or gouged apertures that would prevent engagement or safe use of vehicle securement devices or container lifting devices. Corner fittings must not have any repairs.

5.2.5 Corner Posts. See Figure 5.2.5. A container is unacceptable if a corner post has any of the following major defects:

a. A dent or bend that is greater than 3/4 inch (19mm) in depth, regardless of length;

b. A crack, break, cut, tear, puncture, or corrosive failure;

c. A defective, cracked, or broken weld at the juncture with a corner fitting; or

d. Any splice. (The structural filler component between the corner post and side rail of certain container designs is not to be construed as a splice. It is part of the original manufacturing.)

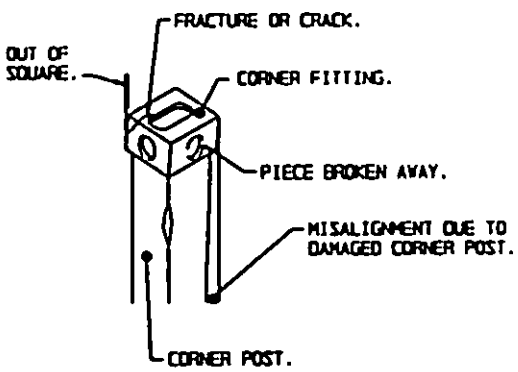

FIGURE 5.2.4 - CORNER FITTING

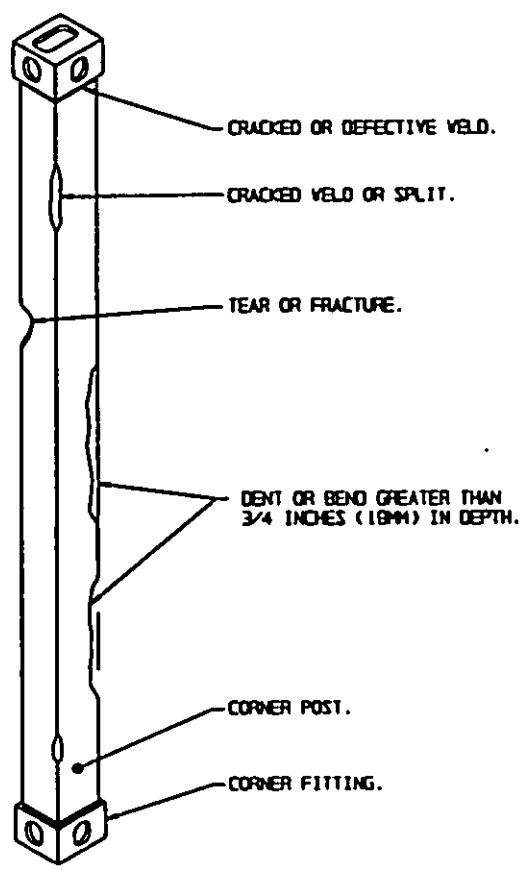

FIGURE 5.2.5 - CORNER POST

5.2.6 Rear End Frame. See Figures 5.2.6A and 5.2.6B. A container is unacceptable if a rear end frame has any of the following major defects:

a. A dent or bend in any primary structural component that is greater than 3/4 inch (19mm) in depth, regardless of length;

b. A crack, break, cut, tear, puncture, or corrosive failure in any primary structural component;

c. A missing, cracked, or broken weld at the juncture between any primary structural components;

d. A loose or missing fastener at the juncture between any primary structural components of an aluminum type end frame assembly;

e. More than one splice or an improper splice (such as a lapped splice) in a door header;

f. Any splice in a door sill;

g. Any dent or distortion in the rain gutter or a J-bar that restricts proper operation of door; or

h. Any repair that interferes with the proper operation of the door hardware or the door seal.

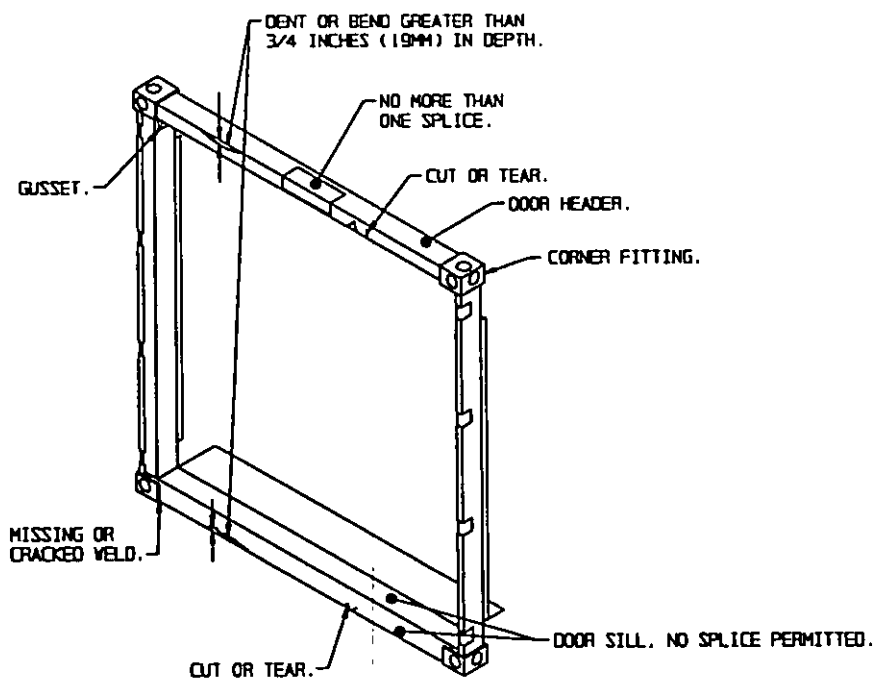

FIGURE 5.2.6A - REAR END FRAME

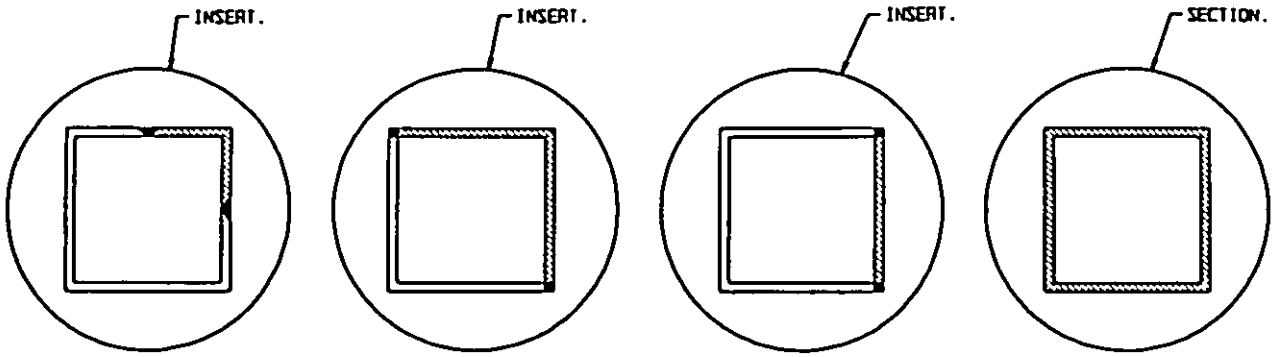

EXAMPLES OF ACCEPTABLE HEADER SPLICE

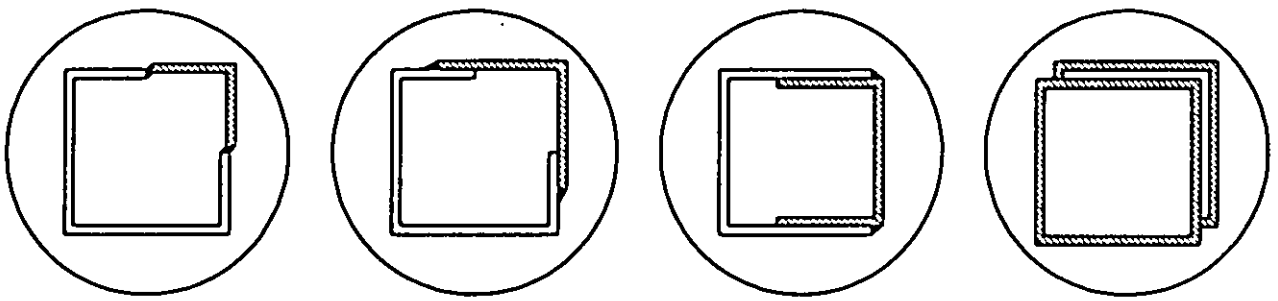

IMPROPER SPLICES - INSERTS NOT FLUSH WITH REMAINING RAIL

SECTION NOT IN LINE WITH RAIL

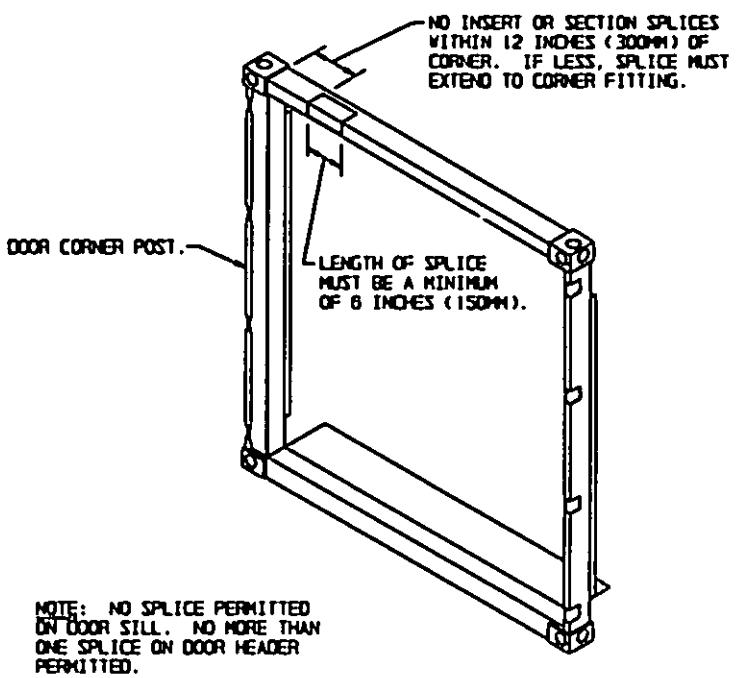

FIGURE 5.2.6B - SPLICE LIMITATIONS FOR DOOR HEADER

5.2.7 Front End Frame. See Figures 5.2.7A and 5.2.7B. A container is unacceptable if a front end frame has any of the following major defects:

a. A dent or bend in any primary structural component that is greater than 3/4 inch (19mm) in depth, regardless of length;

b. A crack, break, cut, tear, puncture, or corrosive failure in any primary structural component;

c. A missing, cracked, or broken weld at the juncture between any primary structural components;

d. A loose or missing fastener at the juncture between any primary structural components of an aluminum type end frame assembly; or

e. More than one splice or an improper splice (such as a lapped splice) in a top or bottom end rail.

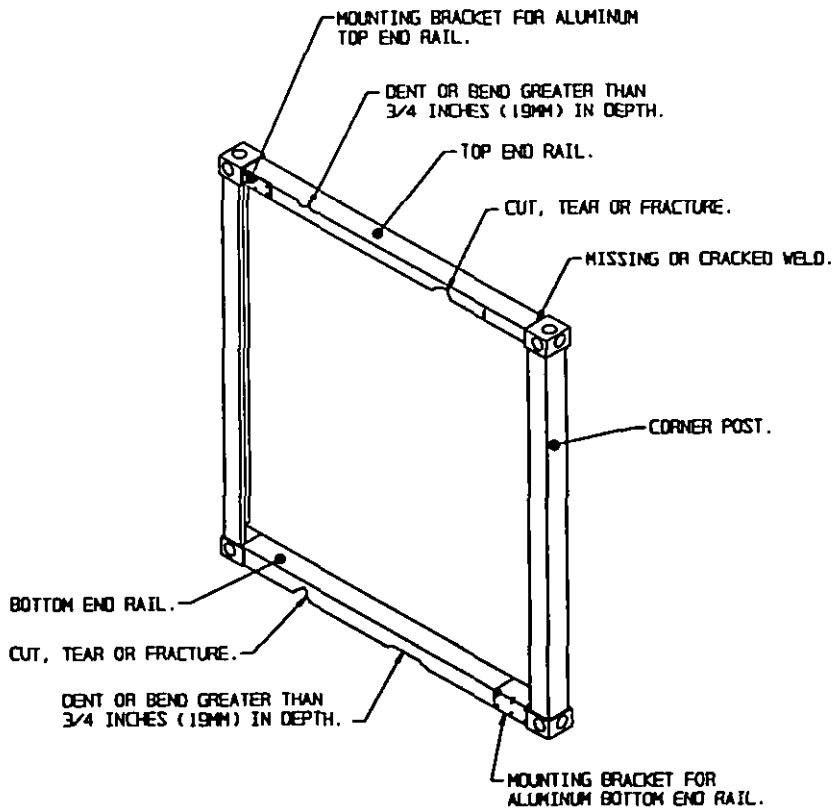

FIGURE 5.2.7A - FRONT END FRAME

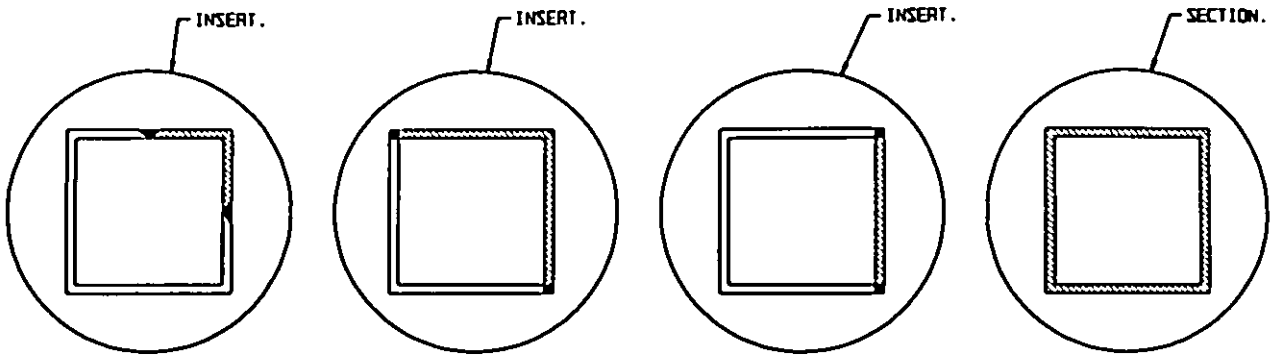

EXAMPLES OF ACCEPTABLE END RAIL SPLICE

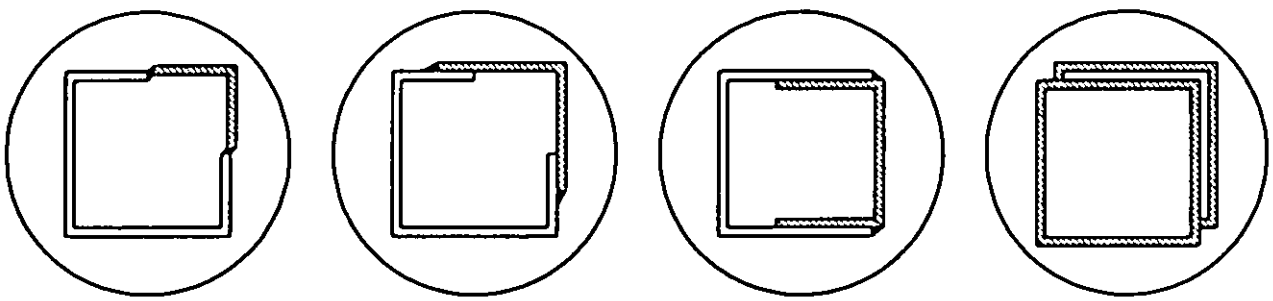

IMPROPER SPLICES - INSERTS NOT FLUSH WITH REMAINING RAIL

SECTION NOT IN LINE WITH REMAINING RAIL

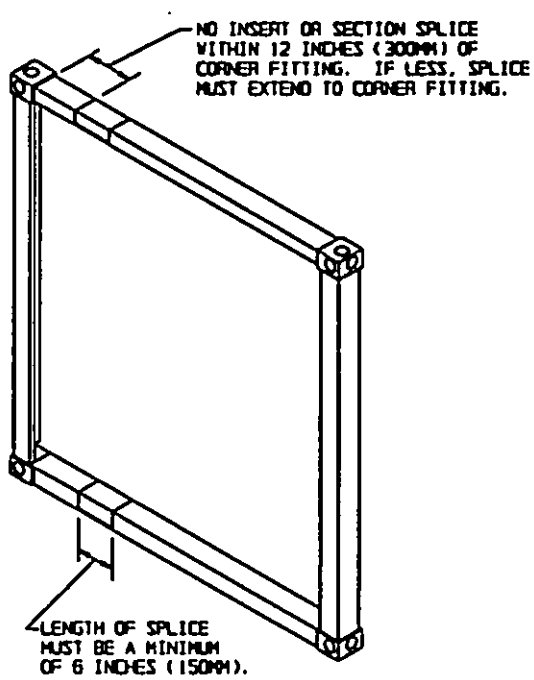

NOTE: NO MORE THAN ONE SPLICE PER END RAIL IS PERMITTED.

FIGURE 5.2.7B - SPLICE LIMITATIONS FOR END RAILS

5.2.8 Side Rails. See Figures 5.2.8A, 5.2.8B, 5.2.8C, 5.2.8D and 5.2.8E. A container is unacceptable if any side rail has any of the following major defects:

a. A dent or bend that is greater than 3/4 inch (19mm) in depth, regardless of length;

b. A crack, break, cut, tear, puncture, or corrosive failure;

c. A missing, cracked, or broken weld at the juncture with other primary structural components;

d. A *loose or missing fastener at the juncture* between the side rail and the end frame of an aluminum type container assembly; or

e. More than two splices in any one top or bottom side rail. (For purposes of this criteria, the door header and door sill of a side-opening container are considered to be side rails. Splices on these components must not interfere with the proper operation of the side doors.)

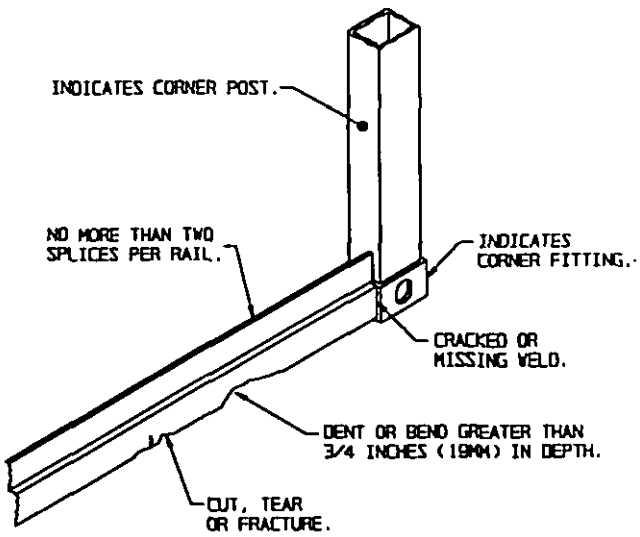

FIGURE 5.2.8A - STEEL SIDE RAIL

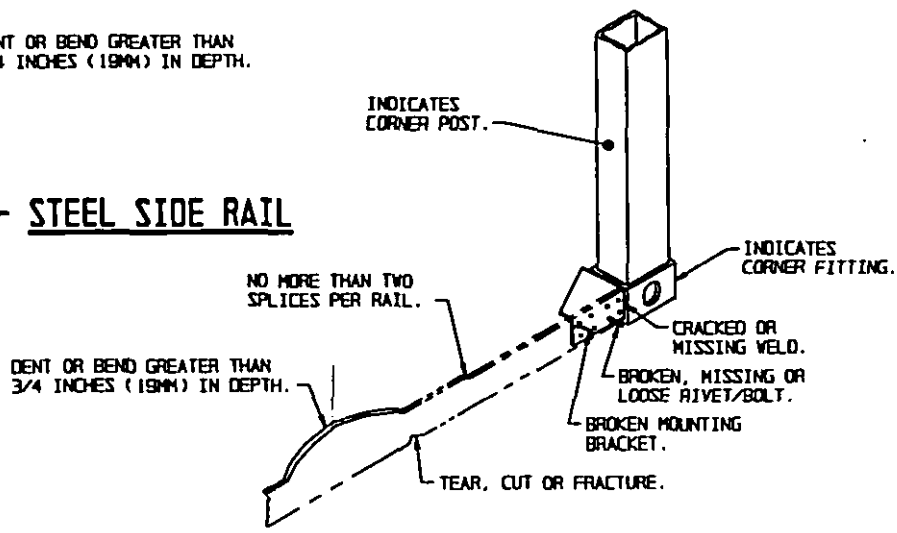

FIGURE 5.2.8B - ALUMINUM SIDE RAIL

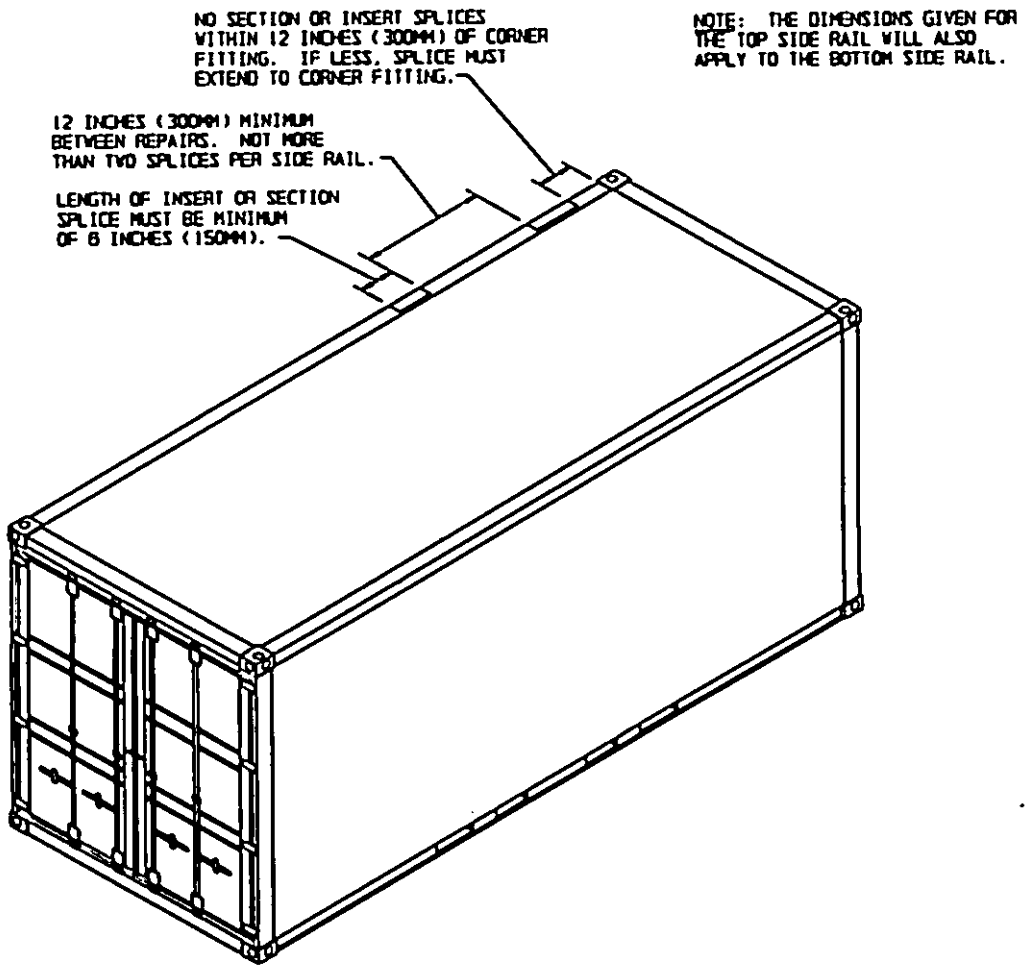

FIGURE 5.2.8C - SPLICE LIMITATIONS FOR SIDE RAILS

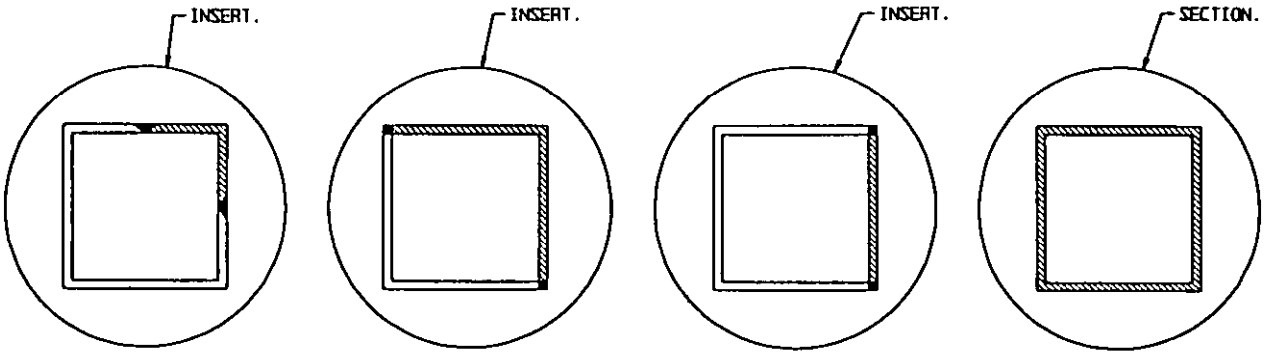

EXAMPLES OF ACCEPTABLE TOP SIDE RAIL SPLICE

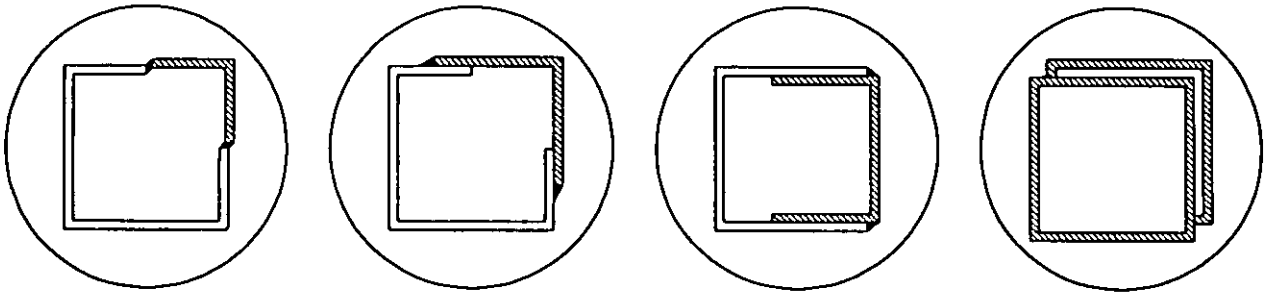

IMPROPER SPLICES - INSERTS NOT FLUSH WITH REMAINING RAIL

SECTION NOT IN LINE WITH REMAINING RAIL

FIGURE 5.2.80 - EXAMPLES OF TOP SIDE RAIL SPLICES

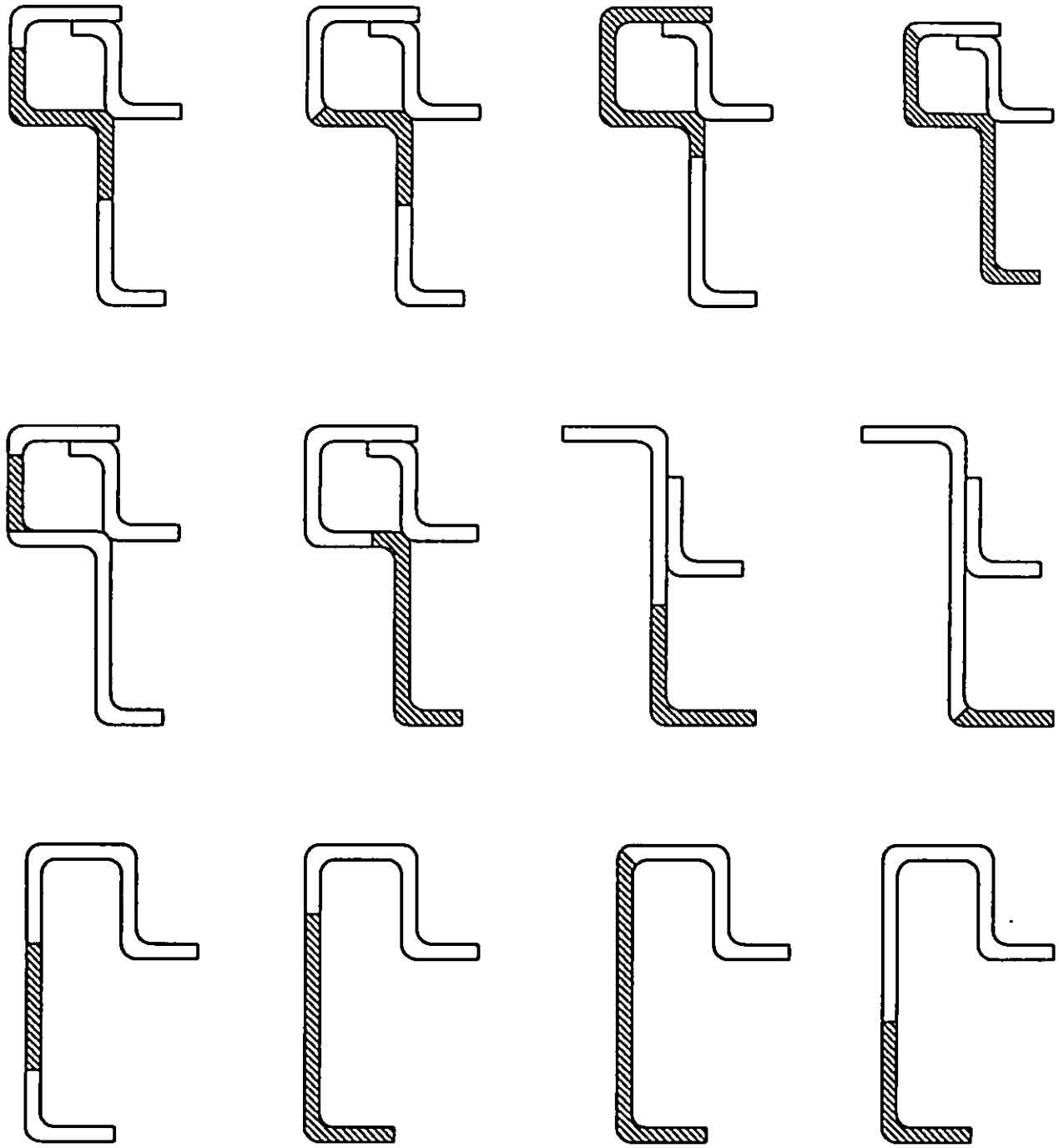

NOTE: INSERTS SHOWN AS CROSS SECTIONS THROUGH THE BOTTOM RAIL PROFILE. ALL EXAMPLES SHOWN ARE ACCEPTABLE SPLICES.

FIGURE 5.2.8E - EXAMPLES OF BOTTOM RAIL INSERTS

5.2.9 Floor Cross Members. See Figures 5.2.9A, 5.2.9B, 5.2.9C and 5.2.9D. Floor cross members, including gooseneck tunnel components, are considered to be a part of the primary structure and a container is unacceptable if any floor cross member has any of the following major defects:

a. A dent or bend that is greater than 3/4 inch (19mm) in depth, regardless of length;

b. A crack, break, cut, tear, puncture, or corrosive failure;

c. A missing, cracked, or broken weld at the juncture with the bottom side rail;

d. A loose or missing fastener at the juncture with the bottom side rail of an aluminum type container;

e. More than two splices or an improper splice (such as a full profile section) in any one cross member; or

f. A separation between the top of a cross member and underside of the flooring that is greater than 3/8 inch (10mm) at point of attachment.

5.2.10 Cross Member Juncture with Side Rail. Welding patterns conforming to the original manufacturer's design are acceptable. Only abnormal welding patterns due to damage and/or improper repair are cause for rejection. Typically, the juncture between a cross member and a side rail is welded continuously on one side of the joint. Since welding patterns may vary depending on design and manufacture, inspection should be directed at looking for broken junctures or welded repairs that are not consistent with other similar welds of that container.

5.2.11 Acceptable Splicing on Cross Members. A maximum of two splices per floor cross member is permissible. An acceptable splice is a minimum of 6 inches (150mm) long and is a butt-welded insert. If a splice would end within 12 inches (300mm) of another weld, such as at the juncture with the bottom side rail, it must be extended to that weld. An acceptable splice restores the original size and cross-sectional profile of the cross member.

5.2.12 Cross Member Stiffeners. When many of the older military specification MILVANs were overhauled, the middle 17 cross members were strengthened with full length angle stiffeners. Subsequent cross member upgrades were also accomplished with a heavier (7 gauge) cross member replacement. Any combination of these repairs on the same MILVAN is acceptable provided other limitations are adhered to and at least the middle 17 cross members have been upgraded with either a stiffener or a 7 gauge cross member. Any number of full length angle stiffeners are also permissible on other types of containers. Each stiffener must extend the full length of the cross member, be fully welded to the bottom side rails on each end, and not protrude beneath the surface of the lower edge of the bottom side rails.

5.2.13 Gussets and End Rail Stiffeners. There are no specific dent or bend limitations for gussets and end rail stiffeners. Dents and bends not affecting the structural integrity of the container are permissible. A container is unacceptable if any weld is broken or a gusset or stiffener is removed, broken, cut, torn or punctured.

5.2.14 Structural Integrity of Understructure. Slightly oxidized (rusted), twisted, bent, dented, or bowed floor cross members are not a cause for rejection provided criteria of paragraph 5.2.9 is met, welds are not broken, and in the judgement of the inspector, the structural integrity of the container has not been reduced beyond safe limits. If the strength of the floor is in doubt, the dynamic floor weight test specified in Annex II of the International CSC should be conducted to ascertain that: the understructure will not deflect more than 1/4 inch (7mm) below the bottom surfaces of the bottom corner fittings; no component will be permanently deformed; and no component or weld will fail.

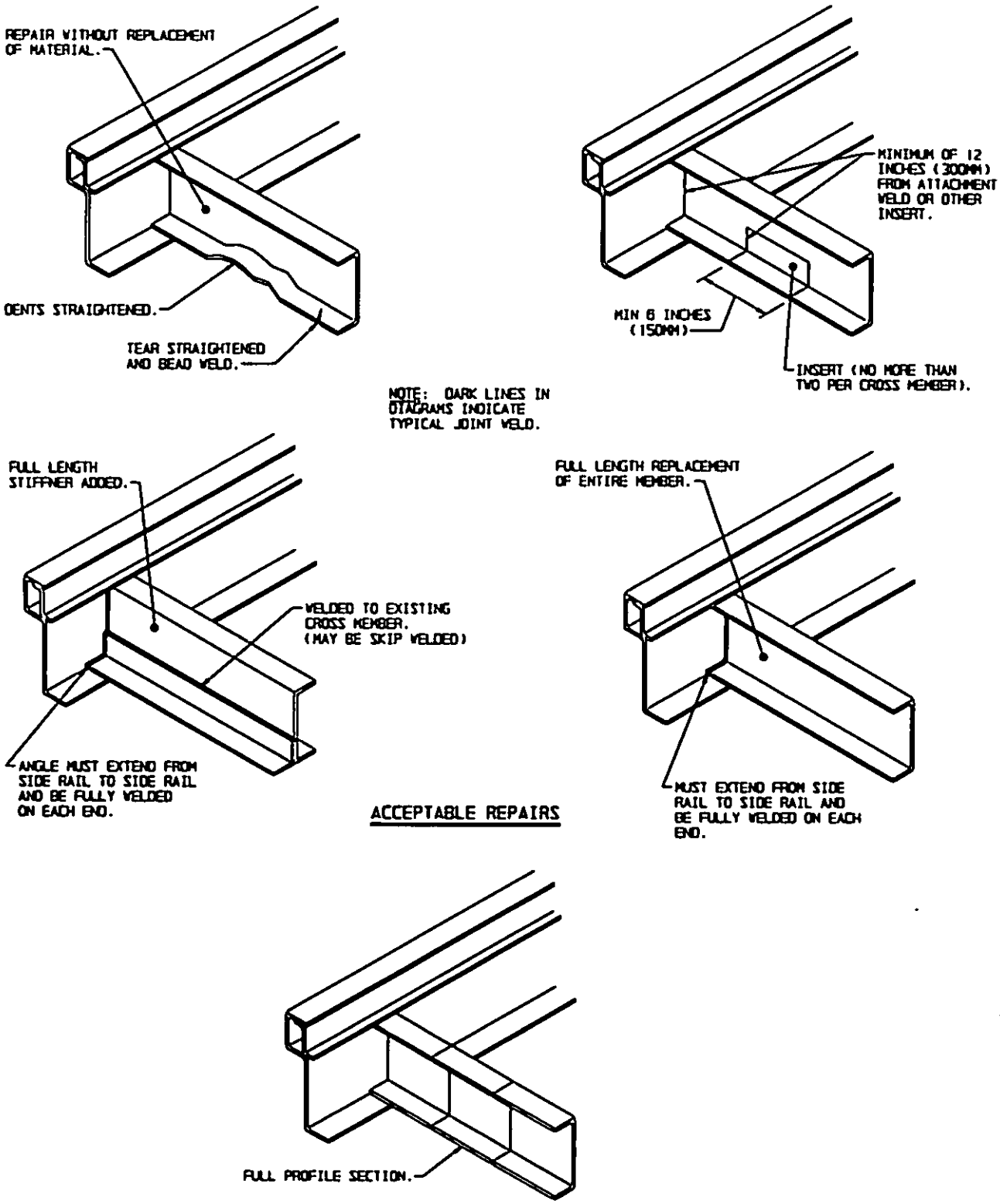

FIGURE 5.2.9A - CROSS MEMBER REPAIR LIMITATIONS

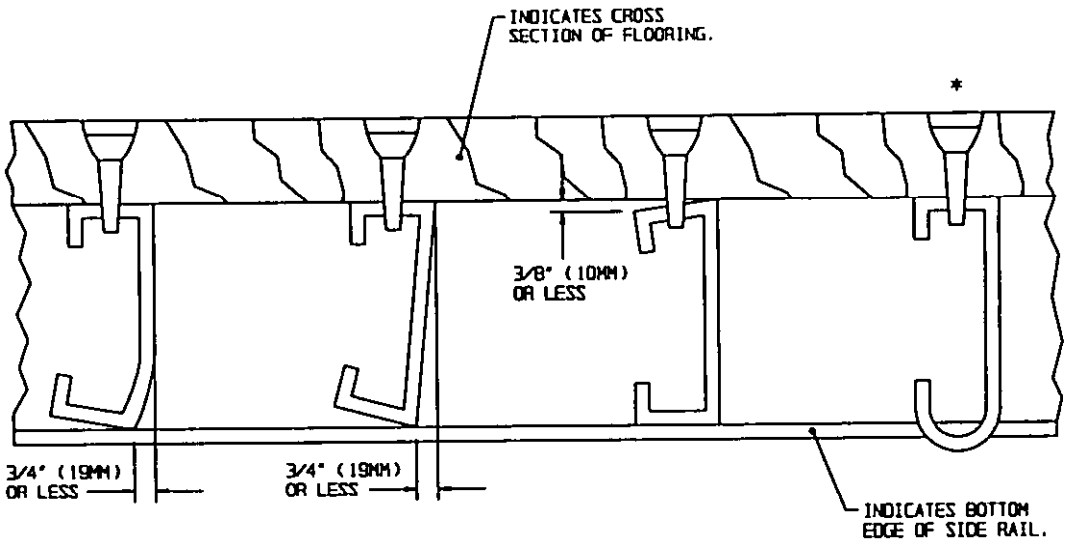

ACCEPTABLE CROSS MEMBERS

* NOTE: CRITERIA OF PARAGRAPH 5.2.9 MUST BE MET AND CROSS MEMBER MUST NOT PROTRUDE BENEATH THE BOTTOM SURFACES OF THE BOTTOM CORNER FITTINGS.

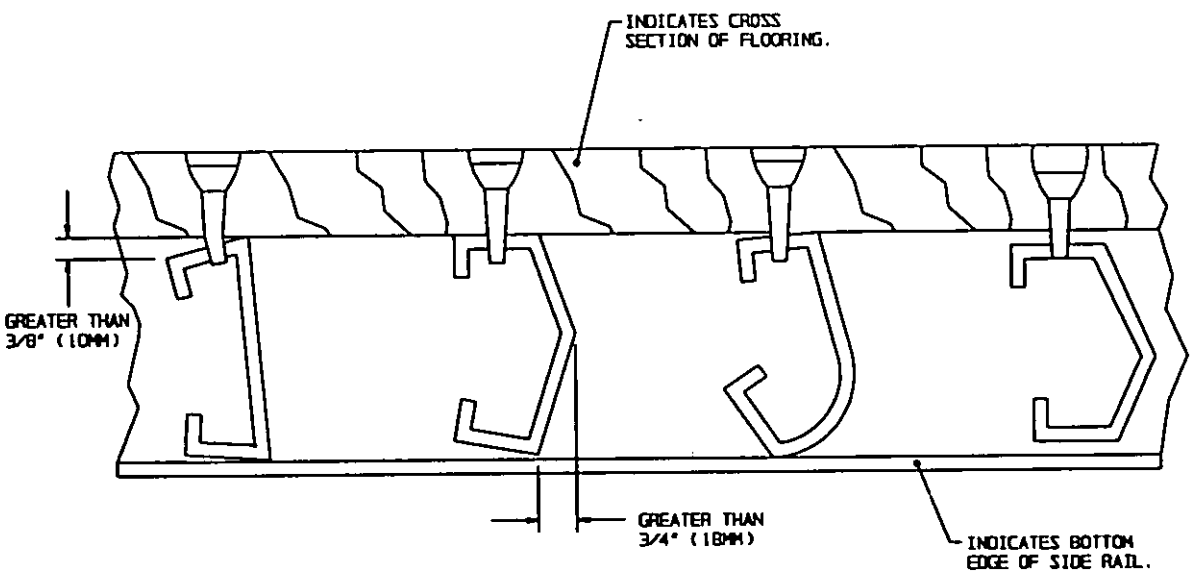

NOT ACCEPTABLE CROSS MEMBERS

FIGURE 5.2.9B - DENT AND BEND LIMITATIONS FOR CROSS MEMBERS

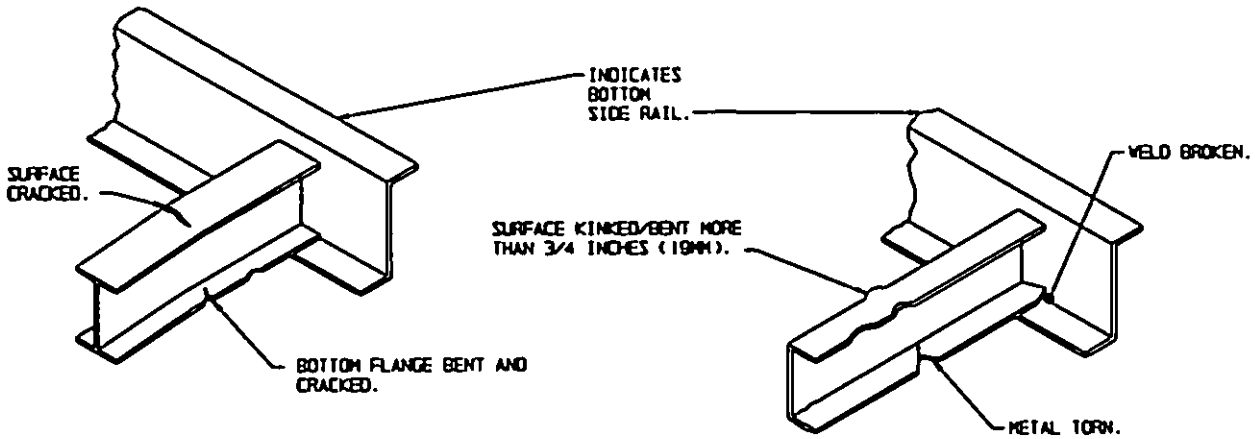

FIGURE 5.2.9C - UNACCEPTABLE CROSS MEMBER DAMAGE

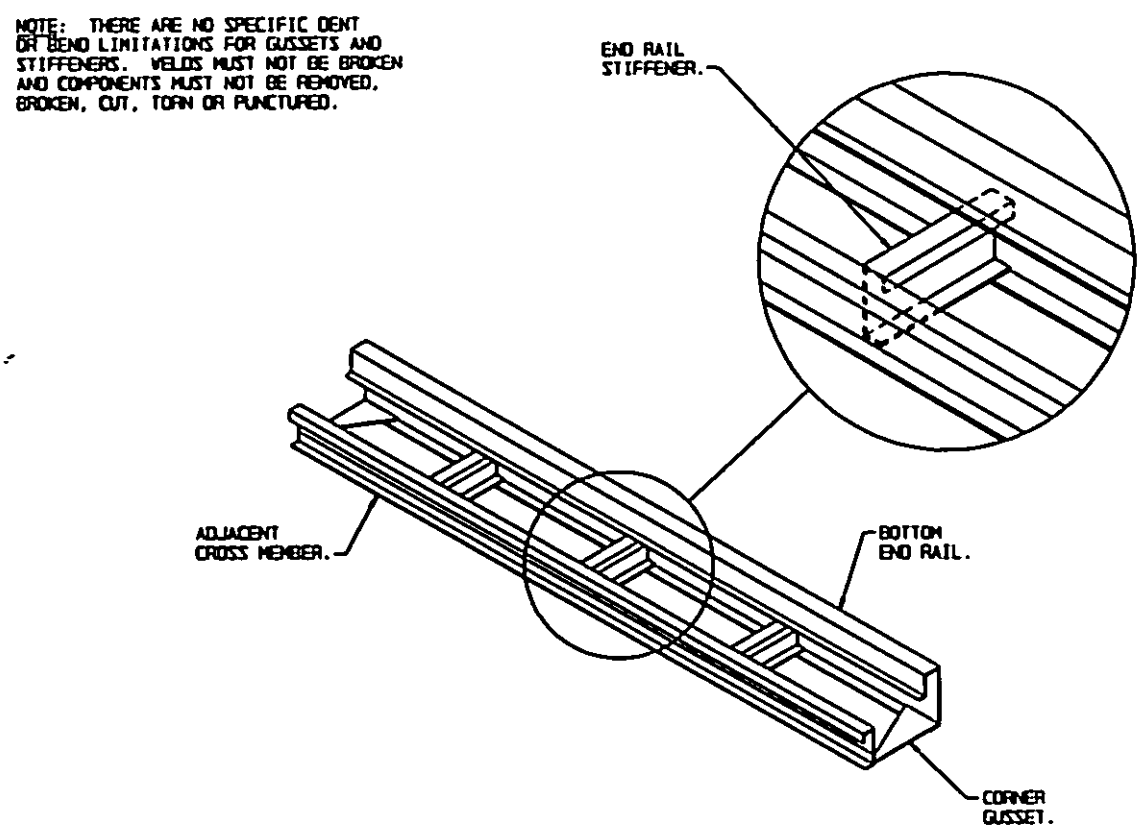

FIGURE 5.2.9D - BOTTOM END RAIL (MILVAN)

5.2.15 Forklift Pockets. See Figure 5.2.15. Forklift pockets are considered to be a part of the primary structure and a container is unacceptable if any forklift pocket has any of the following major defects:

a. A dent or bend in any component that is greater than 3/4 inch (19mm) in depth, regardless of length;

b. A crack, break, cut, tear, puncture, or corrosive failure;

c. A missing, cracked, or broken weld at the juncture with the bottom side rail;

d. A loose or missing fastener at the juncture with the bottom side rail of an aluminum type container;

e. More than two splices or an improper splice in any cross member forming the side of a forklift pocket;

f. Any splice in a forklift pocket strap;

g. A separation between top of forklift pocket (tunnel) and underside of the flooring that is greater than 3/8 inch (10mm) at point of attachment; or

h. Any damage or degradation (such as a broken strap) that would prevent safe handling by forklift equipment and could place any person in danger during subsequent handling, stacking, or transport of the intermodal container.

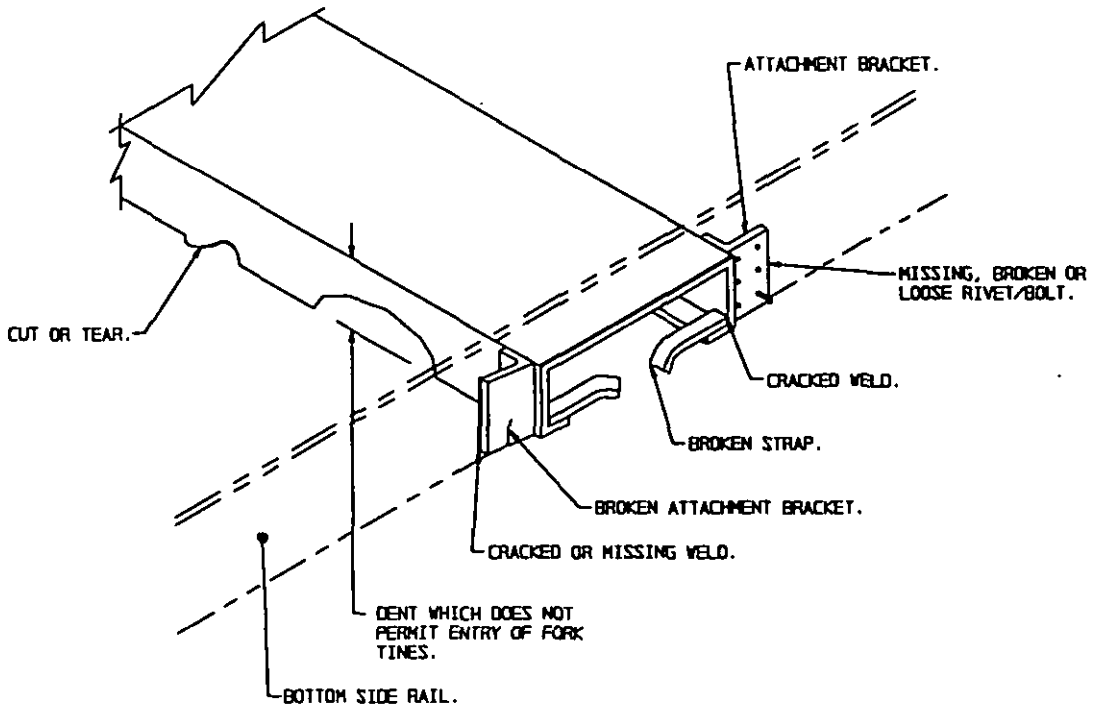

FIGURE 5.2.15 - EXAMPLES OF FORKLIFT POCKET DAMAGE

5.2.16 Special Container Hardware. See Figures 5.2.16A and 5.2.16B.

a. Collapsible Flatrack End Wall. The end wall locking hardware for collapsible type flatracks must not be seized, twisted, broken, missing or otherwise inoperative. Any twist, dent or bend that renders the folding end wall inoperable is cause for rejection.

b. Open-Top Swinging Header. Header pins must not be seized, twisted, broken, missing, or otherwise inoperative. The header itself must not have more than one splice and must not have any dents or bends greater than 3/4 inch (19mm) in depth, regardless of length. Any twist, dent or bend that renders the header inoperable is cause for rejection.

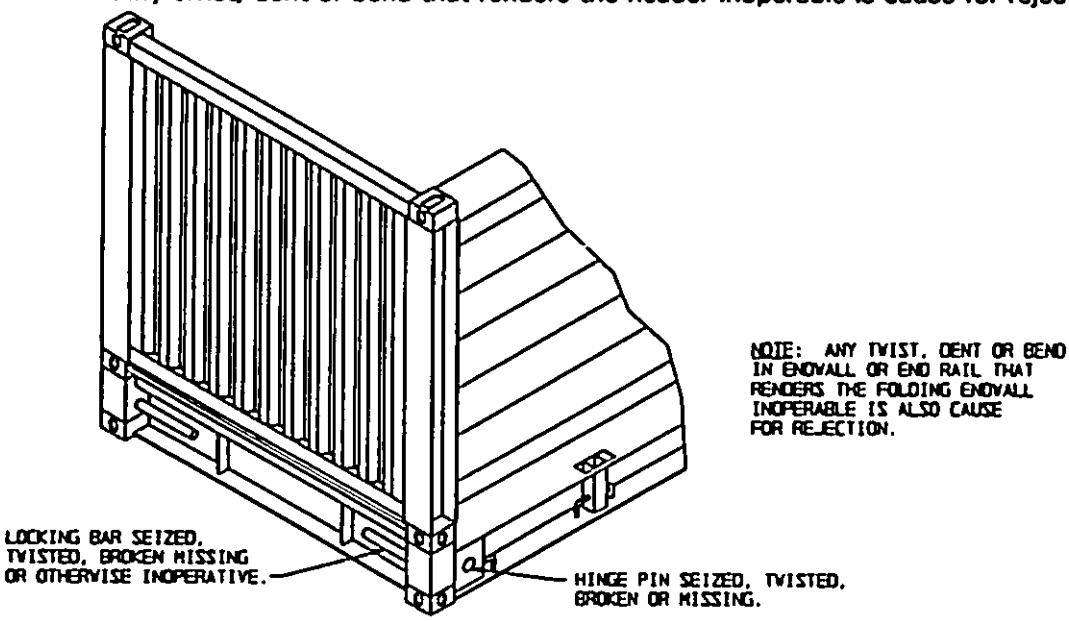

FIGURE 5.2.16A - COLLAPSIBLE FLATRACK ENDWALL DAMAGE

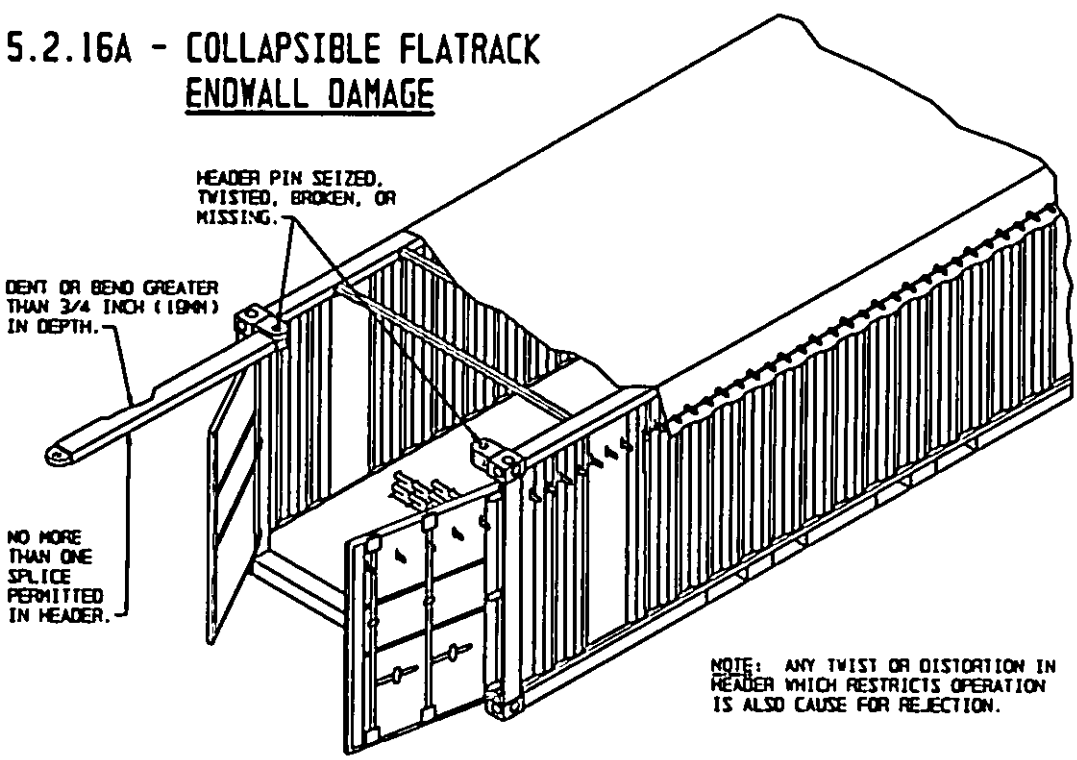

FIGURE 5.2.16B - SWINGING HEADER DAMAGE

5.3 Non-Primary Components. For purposes of this criteria, non-primary components are all items such as wall, roof, and door panels or hardware that are not otherwise specificaly identified as primary (main) structural components (members).

5.3.1 Serviceability of Panels. Normal wear including oxidation (rust), slight dents and scratches, and other damage that does not affect serviceability or the structural integrity of the container is permissible. Pinhole light leaks or porosity in seam welds between panels or in edge welds around perimeter of wall, roof, or door panels are permissible if caulked to prevent water seepage.

5.3.2 Acceptable Patching. See Figures 5.3.2, 5.3.4B and 5.3.7B. Repairs (patches) in wall, roof, or door panels are permissible and may either be an overlapping lap-welded type, an overlapping buck-riveted type, or inserted butt-welded type of repair. Lap-welded patches should overlap existing panel by at least 1/2 inch (13mm). Riveted patches should overlap existing panel by at least 2 inches (50mm). Butt-welded patches should be flush fitting. All repairs on corrugated sections must be neatly made, have a similar cross sectional profile, and not affect the structural integrity of the container. All repairs, regardless of size, must be of a permanent nature and must seal against the ingress of water. Rivets, or other special fasteners used for affixing patches to panels, should be of a closed or blind mandril design. If hollow core pop rivets are used, holes must be caulked to prevent water seepage. There is no limit on the number of patches on a wall, roof, or door panel provided the structural integrity of the container is not impaired. Patches must not overlap other patches.

5.3.3 Side and End Wall Panels. A container is unacceptable if a wall panel has any of the following deficiencies:

a. Any hole, tear, puncture, or corrosive failure in the panel, regardless of the material of construction;

b. Any broken weld at juncture with main structural rail or corner post;

c. Loose or missing fastener in aluminum or FRP panel that is separated by less than 48 inches (1220mm) in any direction from another loose or missing fastener;

d. Inward bulging of the panel that reduces cargo space by more than 1-1/2 inches (40mm) in any direction or that restricts cargo loading; or

e. Outward bulging of the panel that extends beyond the outside surfaces of the corner fittings.

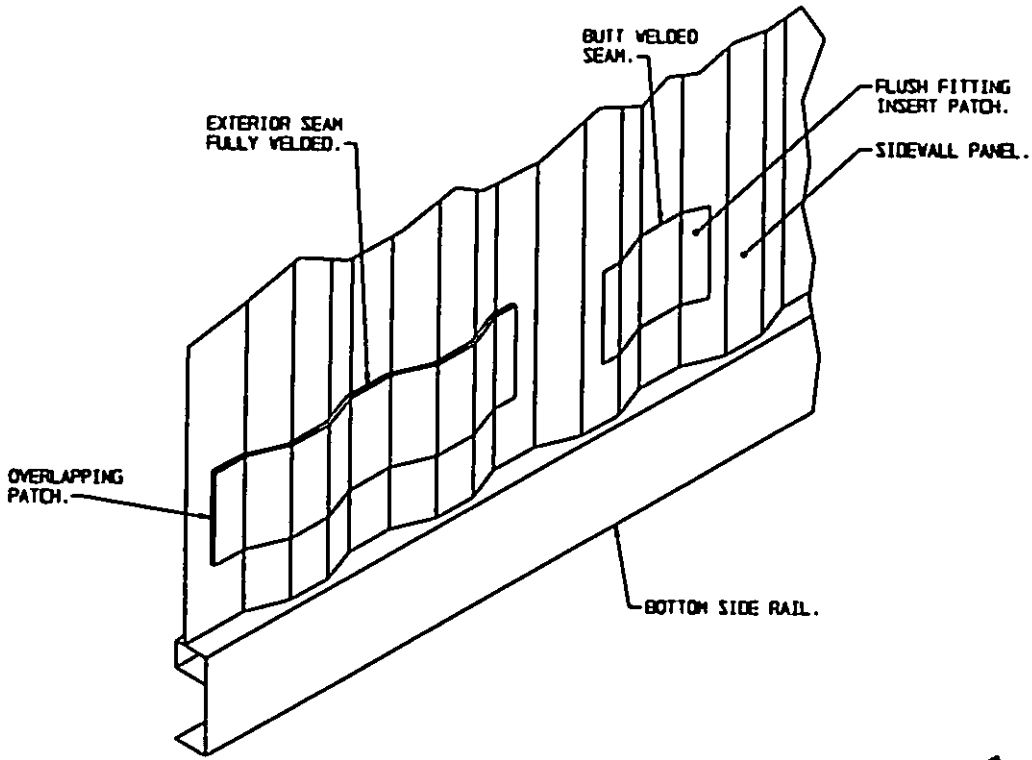

EXTERIOR VIEW

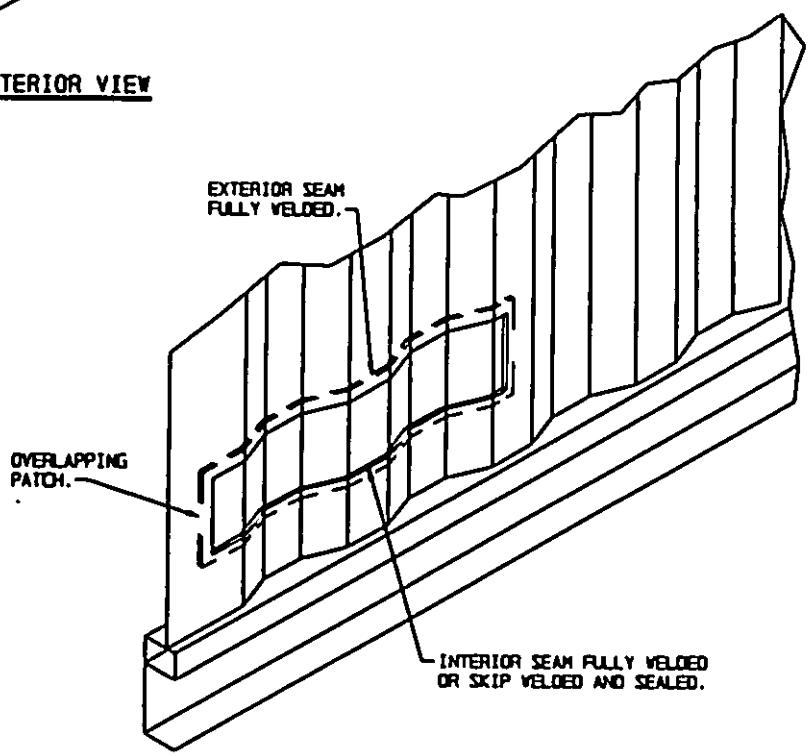

INTERIOR VIEW

FIGURE 5.3.2 - ACCEPTABLE WALL PATCHES

5.3.4 Closed Roof Assembly. See Figures 5.3.4A and 5.3.4B. A container is unacceptable if a roof assembly has any of the following deficiencies:

a. Any hole, tear, puncture, or corrosive failure in a panel, regardless of the material of construction;

b. Any broken weld at juncture with main structural rail;

c. Loose or missing fastener in aluminum or FRP panel that is separated by less than 48 inches (1220mm) in any direction from another loose or missing fastener;

d. Inward bulging of a panel that reduces cargo space by more than 1-1/2 inches (40mm) or that restricts cargo loading;

e. Outward bulging of a panel that extends beyond the top surfaces of the top corner fittings; or

f. Any roof bow missing, cut, broken, or has a weld or bracket torn loose from the top side rail.

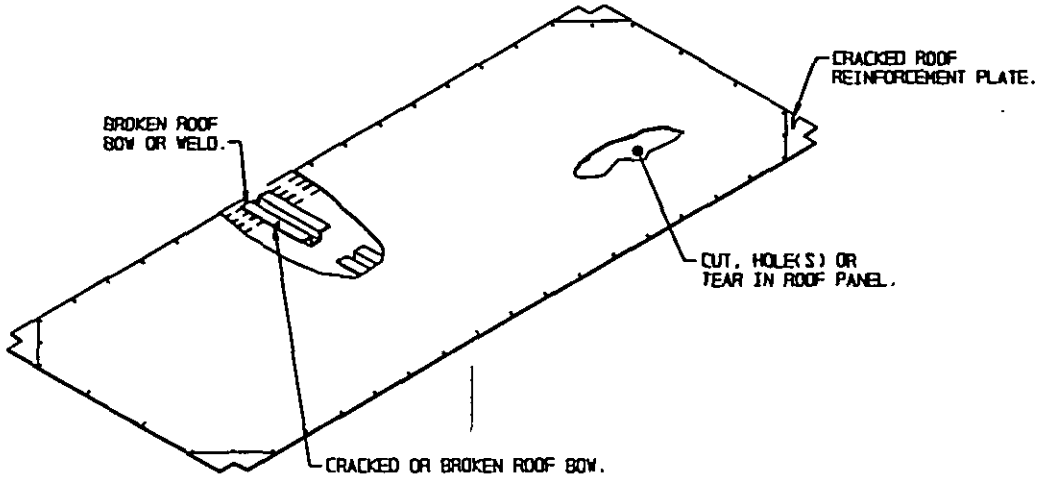

FIGURE 5.3.4A - ROOF ASSEMBLY DAMAGE

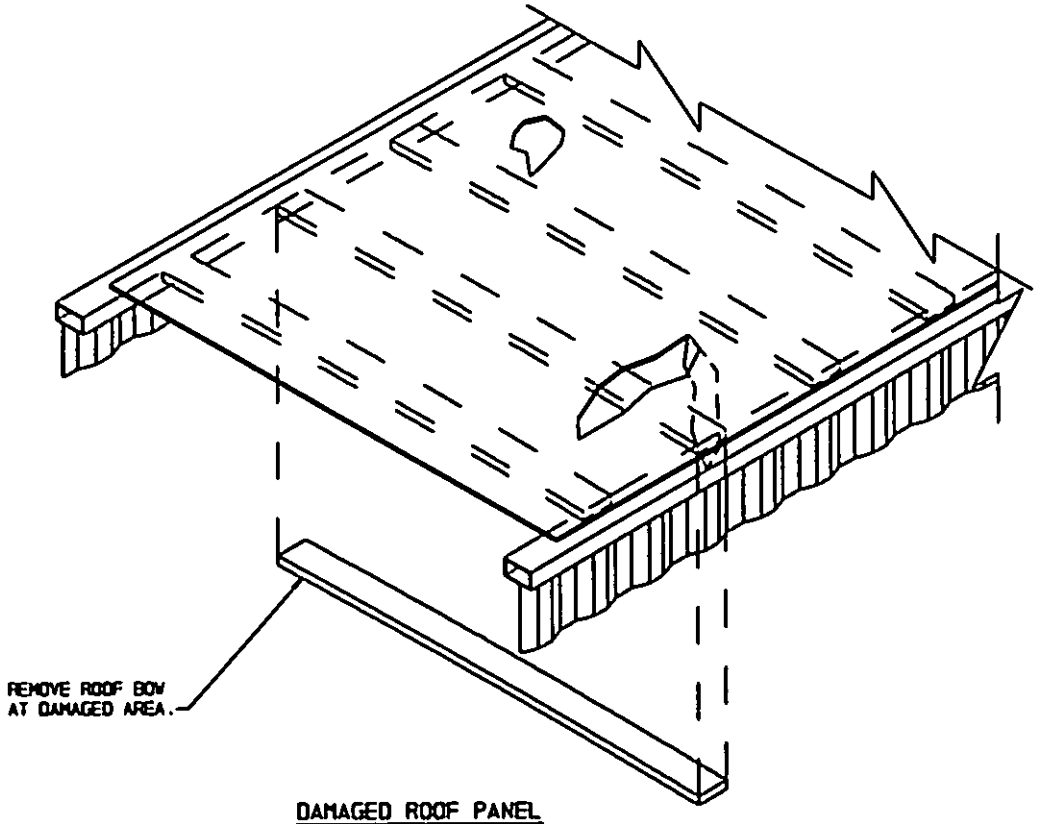

DAMAGED ROOF PANEL

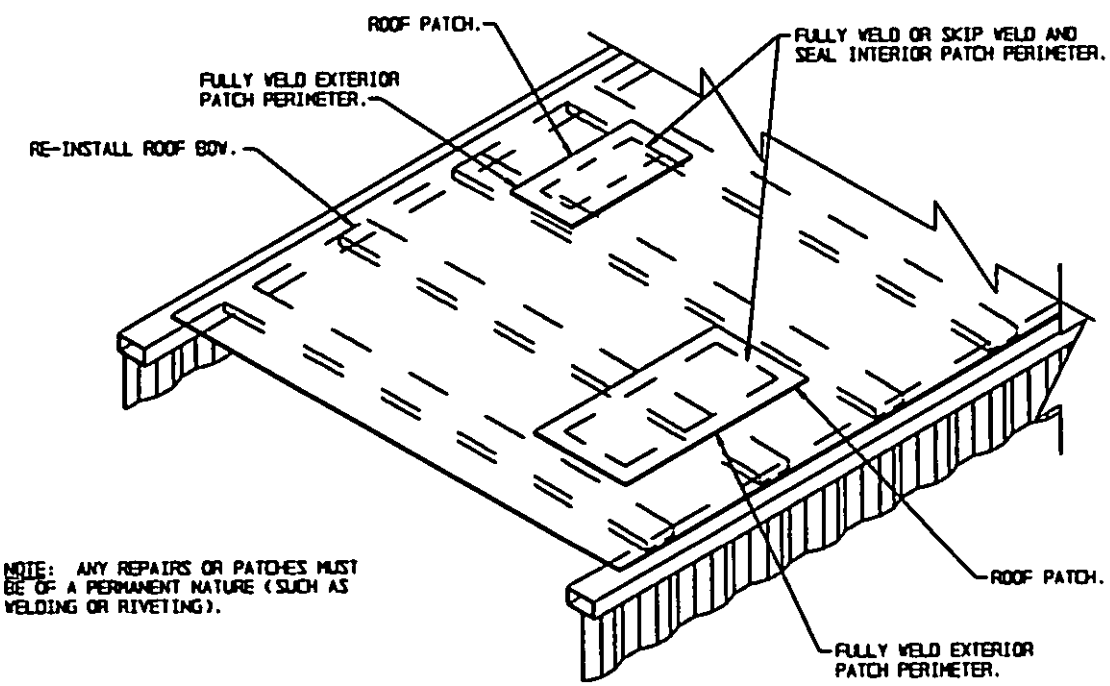

PATCHED ROOF PANEL

FIGURE 5.3.4B - REPAIRED ROOF ASSEMBLY

5.3.5 Removable Cover (Tarp) Assembly. See Figure 5.3.5. If removable roof bows and tarp are used with an open top container, they must be inspected to ensure serviceability and weather-proof integrity when installed on the container. A container is unacceptable if any of the following deficiencies are evident:

a. A roof bow is missing or is damaged and cannot be installed properly;

b. Any hole or tear in the tarp;

c. Tarp does not prevent seepage of water;

d. Tarp cannot be affixed to the upper portion of the container with a TIR customs approved sealing technique;

e. Reinforced eyelets in perimeter of tarp not fitting (nesting) correctly over corresponding loops welded on the top rails;

f. Welded loops missing, broken, or deformed so TIR cable (plastic sheathed wire rope) cannot be threaded through all of them;

g. Wire rope core of the TIR cable broken; or

h. Terminal on the end of the TIR cable unuseable or missing.

5.3.6 Serviceability of Cover (Tarp) Assembly. Neatly made repairs (patches) in the tarp are permissible provided they are of similar material and seal against the ingress of water. All repairs, regardless of size, must be of a permanent nature such as a heat-sealed vinyl patch. Patches must not overlap other patches. Cracked or missing sections of the plastic sheathing on the TIR cable are acceptable provided the wire rope core is not broken and the cable can be properly installed.

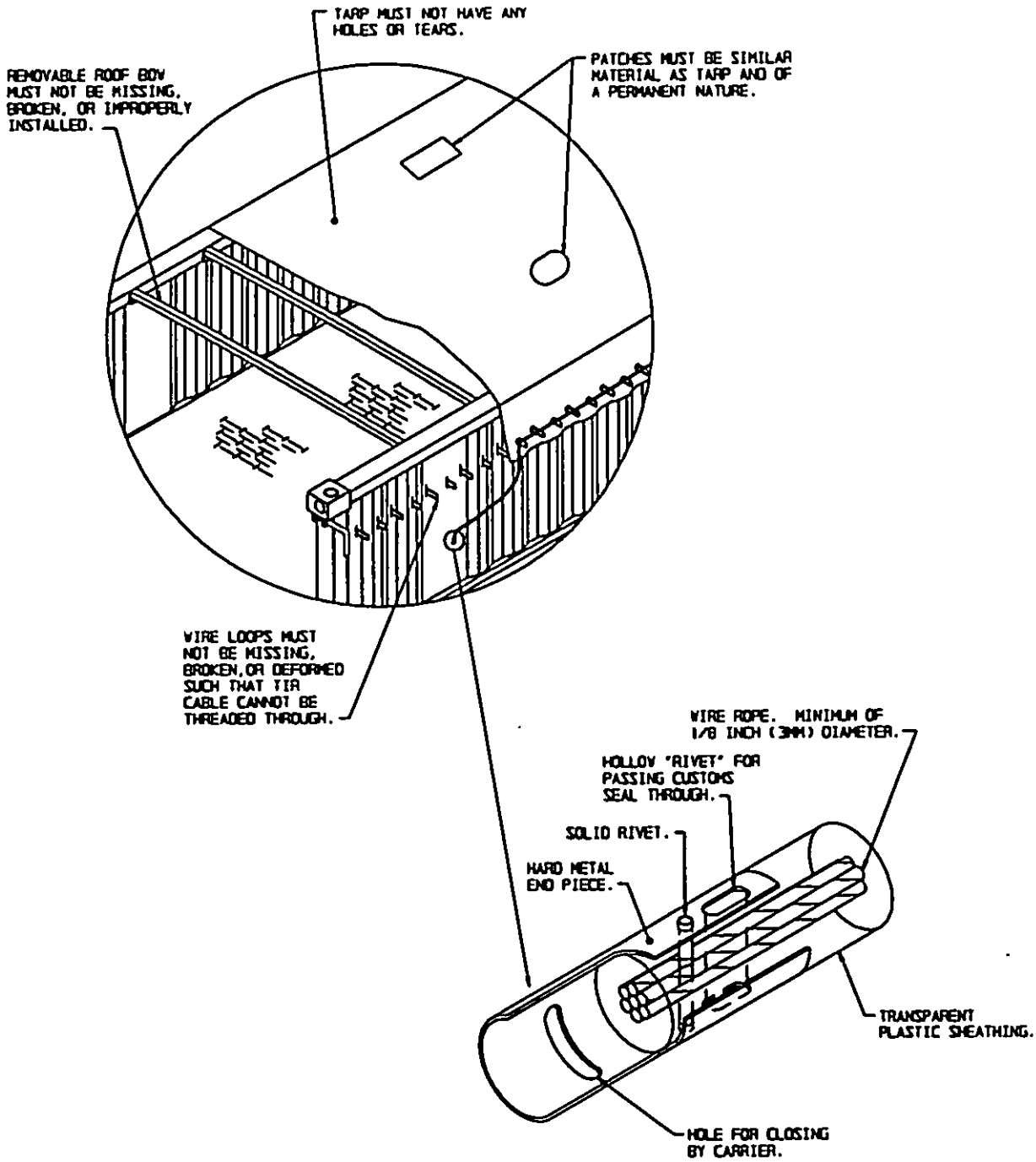

FIGURE 5.3.5 - REMOVABLE COVER (TARP) ASSEMBLY

5.3.7 General Type Door Assembly. See Figures 5.3.7A, 5.3.7B, 5.3.7C, and 5.3.7D. A container is unacceptable if a door assembly has any of the following deficiencies:

a. Any hole, tear, puncture, or corrosive failure in a door panel, regardless of the material of construction;

b. Inward bulging of a door panel that reduces cargo space by more than 1-1/2 inches (40mm) or that restricts cargo loading;

c. Outward bulging of a door panel that causes any portion of the door assembly to extend beyond the outside surfaces of the corner fittings;

d. Any seized, twisted, broken, missing, or otherwise inoperative door hardware including hinges, hinge pins, locking bars, locking bar mounting brackets, cams, cam retainers, handles, and handle retainers;

e. Broken or defective weld on anti-rack hardware such as cam or cam retainer;

f. Less than two hinge assemblies per door, including bolts and hinge pins, welded or otherwise affixed in such a manner to preclude removal or dismantling of the door without leaving obvious traces;

g. Less than two tamper-evident fasteners on each of the top and bottom locking bar mounting brackets or handle retainer not of a tamper-evident design;

h. Customs catch broken, missing, or otherwise inoperative and is required because door design does not otherwise provide for a metal overlap; or

i. Door gasket missing, torn, or severely deformed.

5.3.8 Ramp Type Door. See Figure 5.3.8. The criteria described for general type door assembly (see paragraph 5.3.7) also applies to ramp type doors. All special hardware, including locking bolts, safety catches and chains; must not be seized, twisted, broken, missing, or otherwise inoperative. Any twist, dent, bend or other damage that restricts proper door operation is cause for rejection.

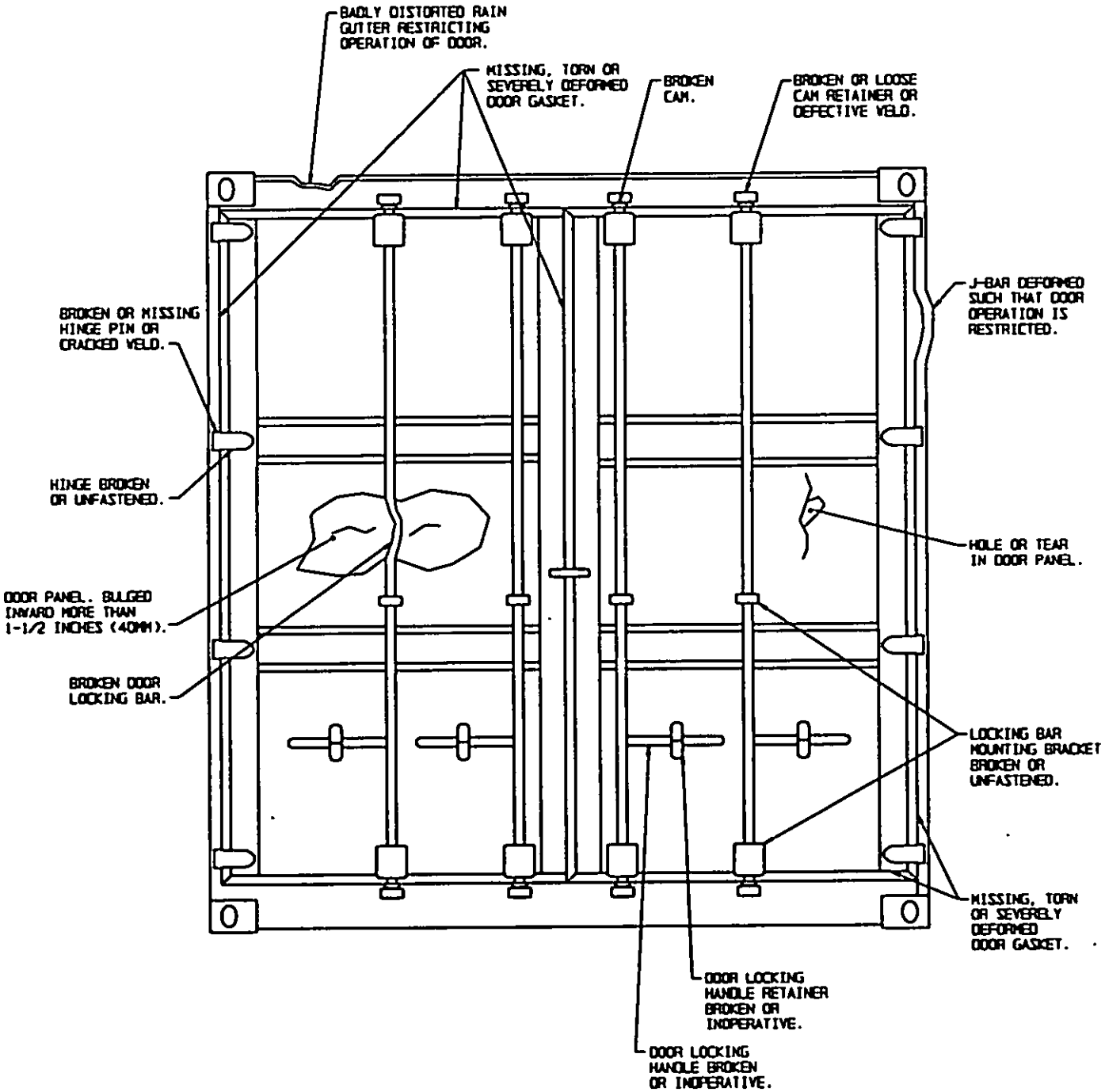

FIGURE 5.3.7A - REAR END DOOR ASSEMBLY DAMAGE

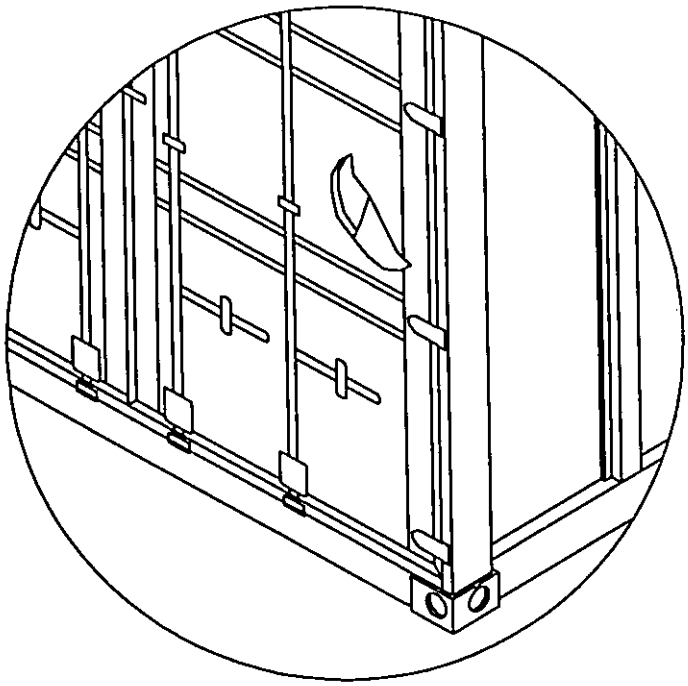

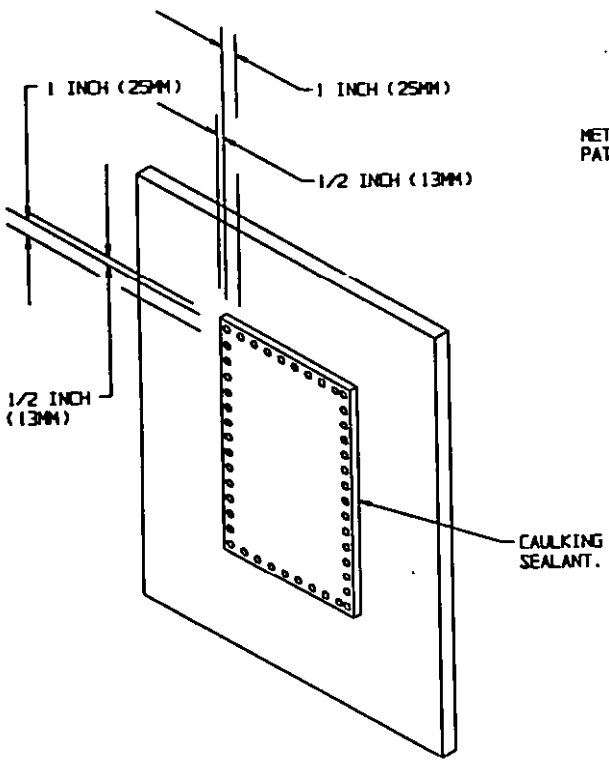

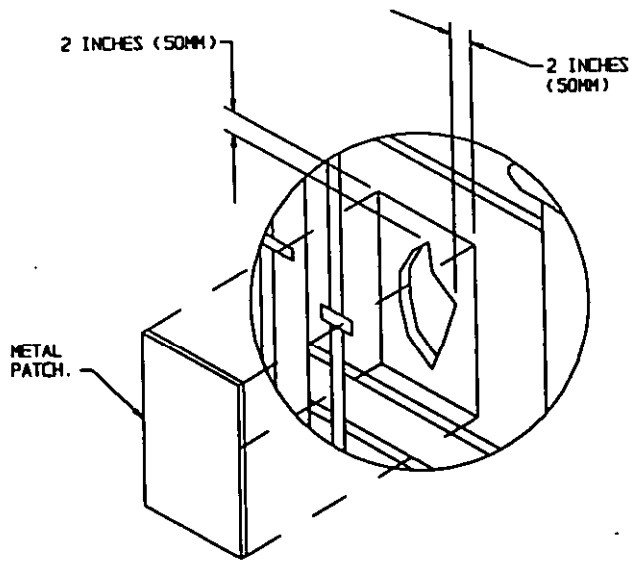

NOTE: FASTENERS MUST MEET TIR REQUIREMENTS. RIVETS OR OTHER SPECIAL FASTENERS SHOULD BE OF A CLOSED OR BLIND MANDRIL DESIGN. IF HOLLOW CORE POP RIVETS ARE USED, HOLES MUST BE CAULKED TO TO PREVENT WATER SEEPAGE.

FIGURE 5.3.7B - PATCHED DOOR PANEL

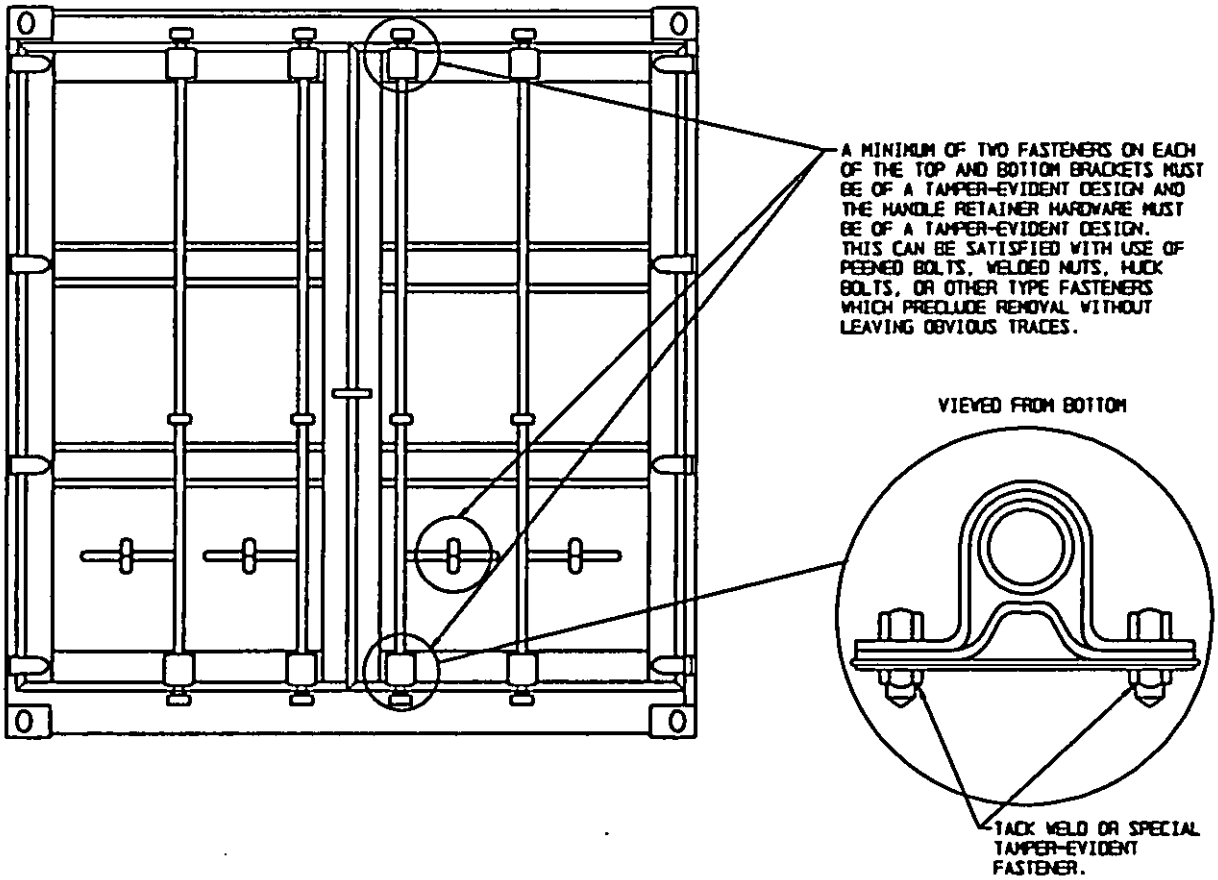

FIGURE 5.3.7C - TIR REQUIREMENTS FOR BRACKETS

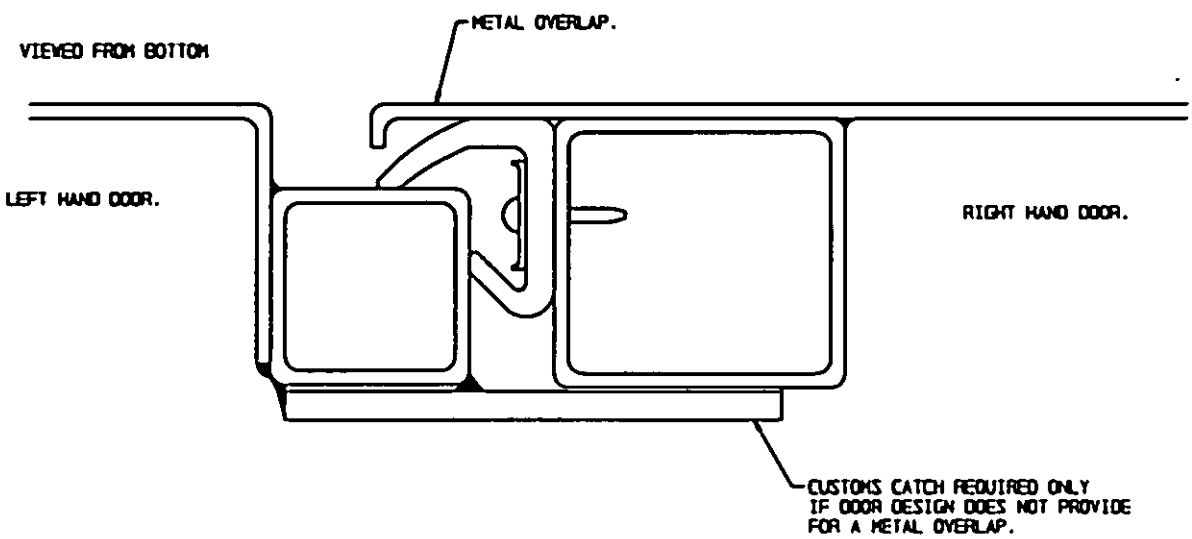

FIGURE 5.3.7D - CUSTOMS CATCH ON A STEEL DOOR

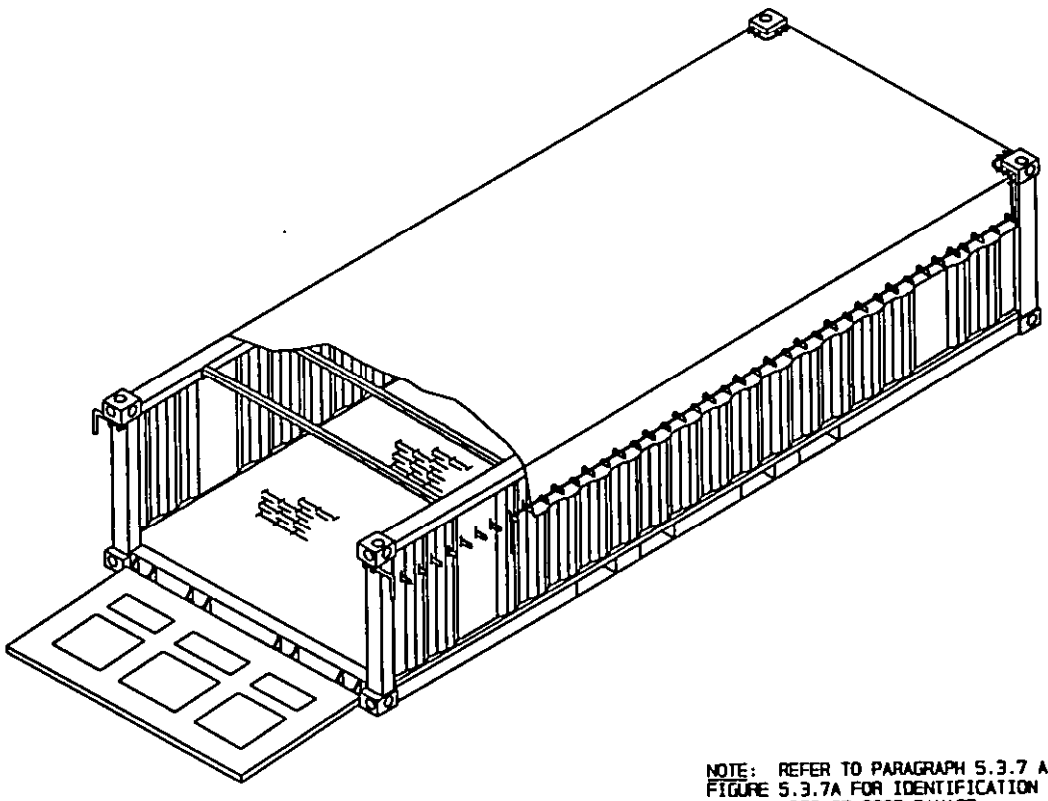

NOTE: REFER TO PARAGRAPH 5.3.7 AND FIGURE 5.3.7A FOR IDENTIFICATION OF OTHER TYPES OF DOOR DAMAGE.

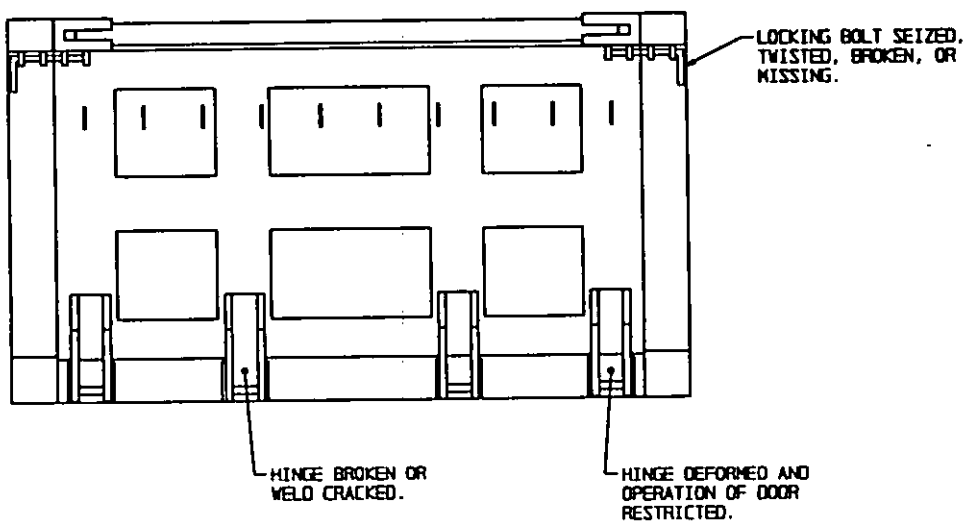

FIGURE 5.3.8 - RAMP TYPE DOOR DAMAGE

5.3.9 Cargo Restraint. See Figures 5.3.9A, 5.3.9B, and 5.3.9C. The cargo restraint system or fixtures, when present and necessary for cargo securement, must be in working order. Containers without a cargo restraint system shall be configured so as to provide sufficient load bearing surfaces for safe support of dunnage materials.

a. Mechanical Restraint System. The mechanical restraint system such as in a MILVAN container must be in working order if required for cargo securement. Horizontal or vertical rails must not be bent or distorted, must not have cracked or suspect welds, and must not have crushed or gouged slots. Horizontal or vertical rails that have crushed or gouged slots are not cause for rejection of the container as long as the damaged slots are not required for securing the cargo and the structural integrity of the rail is not otherwise impaired. Shoring beam assemblies that are broken, bent, or have an inoperable locking mechanism on either end must be rejected for use.

b. Load Bearing Surfaces. Containers without a cargo restraint system shall be so configured as to provide sufficient load bearing surfaces for safe support of dunnage materials. Surfaces on the primary structure of the container such as the interior faces of the corner posts must be smooth and free of protrusions.

c. Load Retainers. Special load retainers such as a structural angle welded to each door corner post of an end-opening container must be inspected to ensure serviceability. A missing, cracked, or broken weld at the juncture between the load retainer and the container structure is unacceptable. A dent or bend in the retainer that is greater than 3/4 inch (19mm) in depth, regardless of length, is also unacceptable.

d. Tiedown Provisions (Lashing Bars or Rings). Provisions or fittings used for attachment of straps or other cargo restraint devices must be in working order. Tiedown provisions that are deformed or broken are not cause for rejection of the container as long as the damaged tiedown provisions are not required for securing the cargo and the structural integrity of the container is not otherwise impaired.

e. Stanchions. A missing, cracked, or broken weld at the juncture between a stanchion (stake pocket) and the flatrack structure is unacceptable. Severe deformation of a stanchion that would restrict installation of a stake is also cause for rejection.

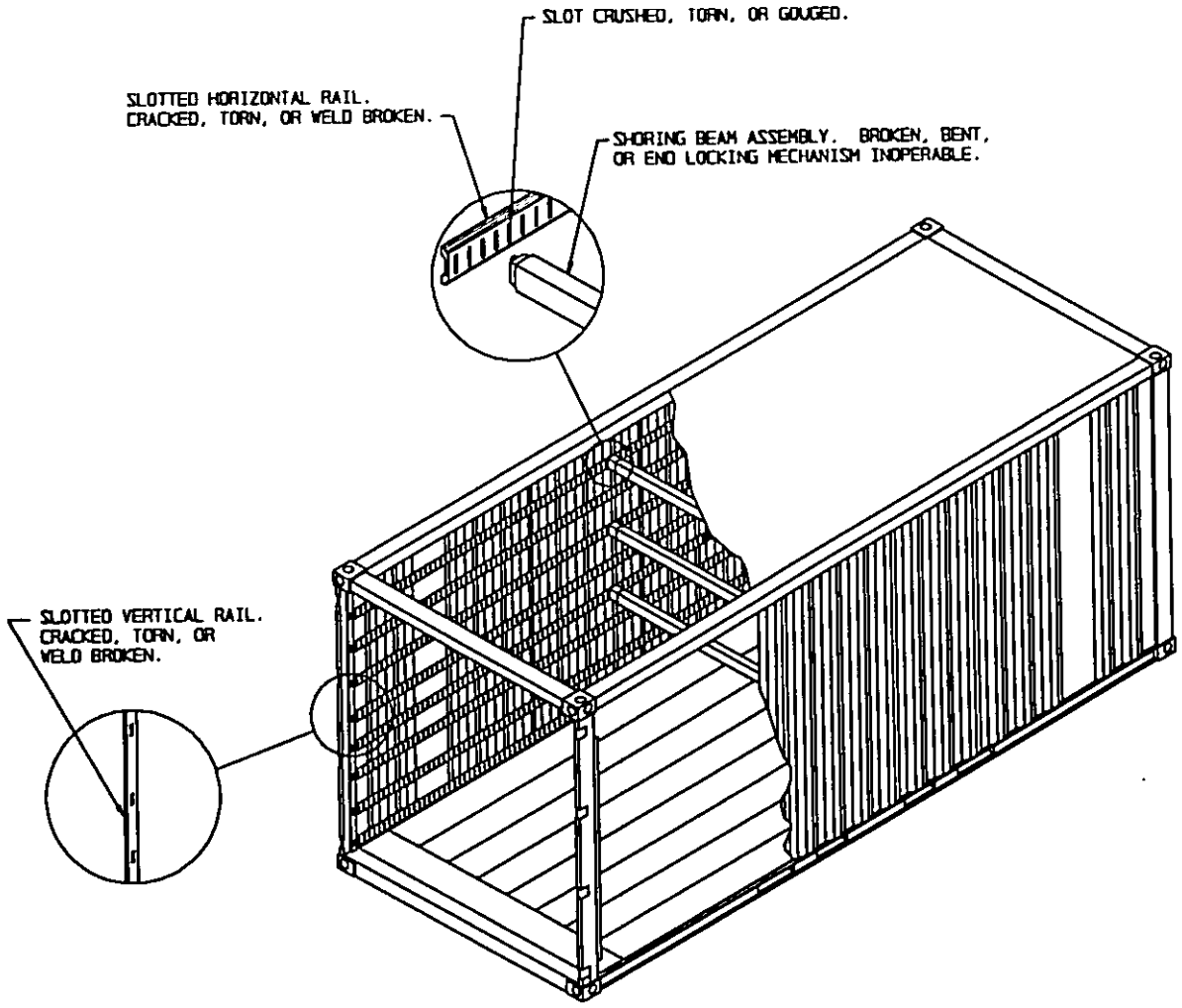

FIGURE 5.3.9A - MECHANICAL RESTRAINT SYSTEM DAMAGE

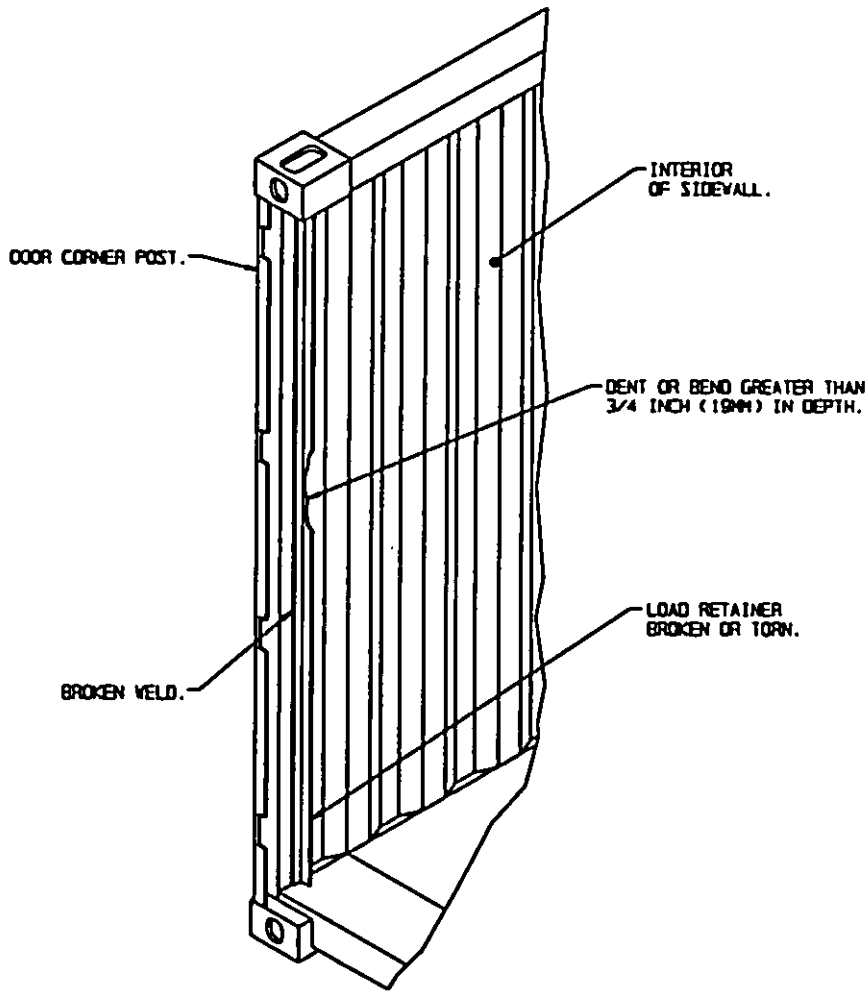

FIGURE 5.3.9B - LOAD RETAINER DAMAGE

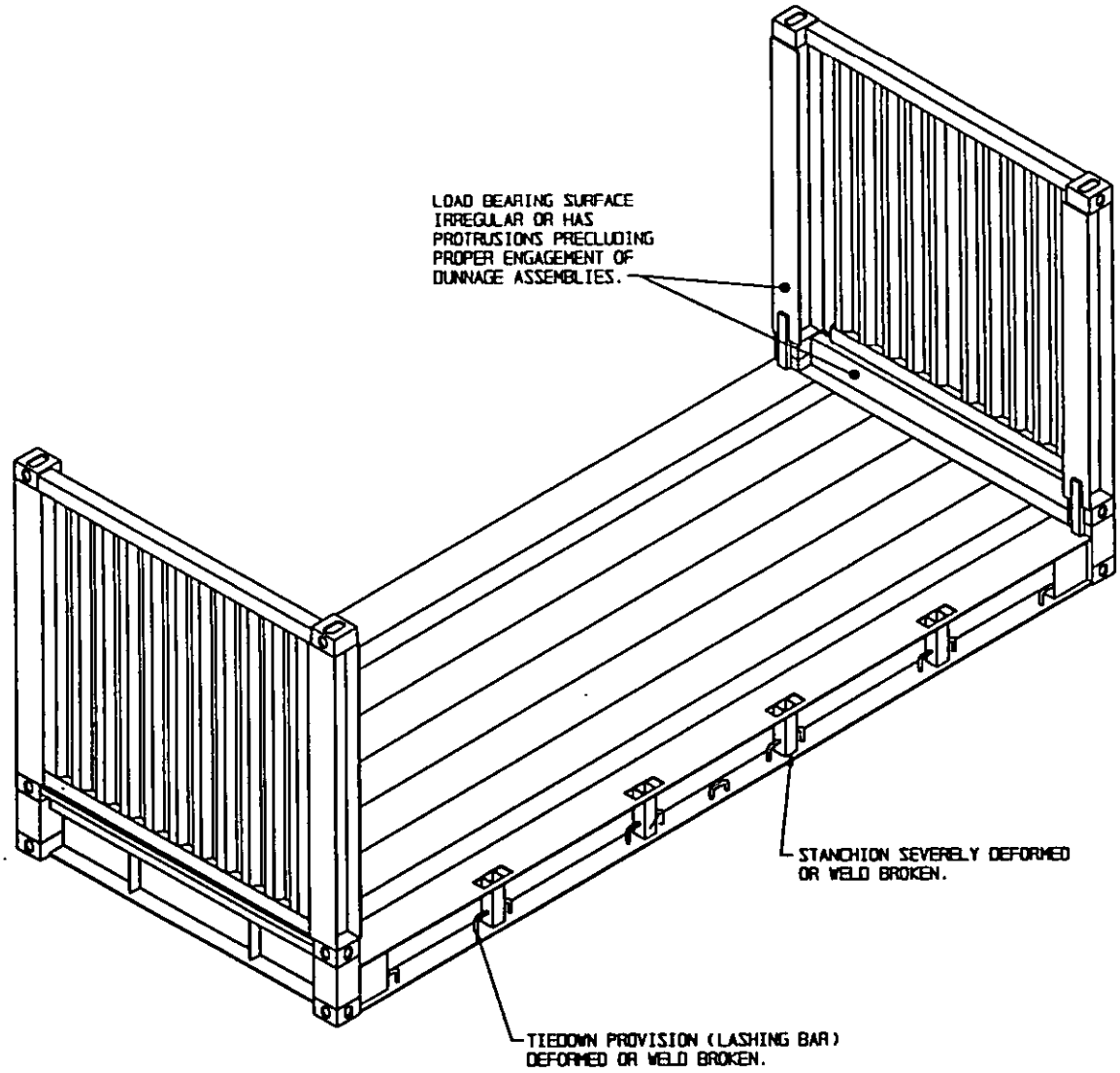

FIGURE 5.3.9C - DAMAGED FLATRACK RESTRAINT PROVISIONS

5.3.10 Flooring. See Figure 5.3.10. A container is unacceptable if the flooring has any of the following deficiencies:

a. Any protrusion above the top surface of the flooring;

b. Any floor fastener that is not flush or countersunk with the surface of the flooring;

c. Any loose or missing floor fastener;

d. Floor not free of debris or residue from a previous cargo;

e. Flooring soaked with hazardous or flammable fluid;

f. Floor contains rotted or broken board; or

g. Floor contains one or more cracked, splintered, warped, stained, or delaminated boards that impairs either the structural integrity of the container or the safe loading of cargo.

5.3.11 Acceptable Flooring Repairs. See Figure 5.3.11. Only one partial length repair board section per container length and no more than three partial length repair board sections through out the entire container floor are permissible. Partial length repair board sections must span at least four cross members and be a material of similar size and configuration as the rest of the flooring. Laterally adjacent repair board sections must not have joints on the same cross member. Both sides of each joint must be adequately supported by and securely fastened to the top surface of a cross member. If the top surface of the cross member, such as a "C" shaped type cross member, is too narrow a structural angle must be welded to it to provide an adequate support surface. The added angle must be sized to extend beyond the adjacent floor board on each side of the repair section joint.

5.3.12 Acceptable Floor Gaps. A container is unacceptable if there is any excessive gap around the perimeter of the flooring or between the floor boards. If a 1-inch wide by 1/16-inch thick feeler gage can be easily inserted "vertically" through a gap to the underside of the container, the gap is considered excessive. Narrow gaps less than 1/2-inch wide, however, are permissible if sealed with caulking.

5.3.13 Structural Integrity of Floor Structure. If the strength of the floor is in doubt, the dynamic floor weight test specified in Annex II of the International CSC should be conducted to ascertain that: the understructure will not deflect more than 1/4-inch (7mm) below the bottom surfaces of the bottom corner fittings; no component will be permanently deformed; and no component or weld will fail.

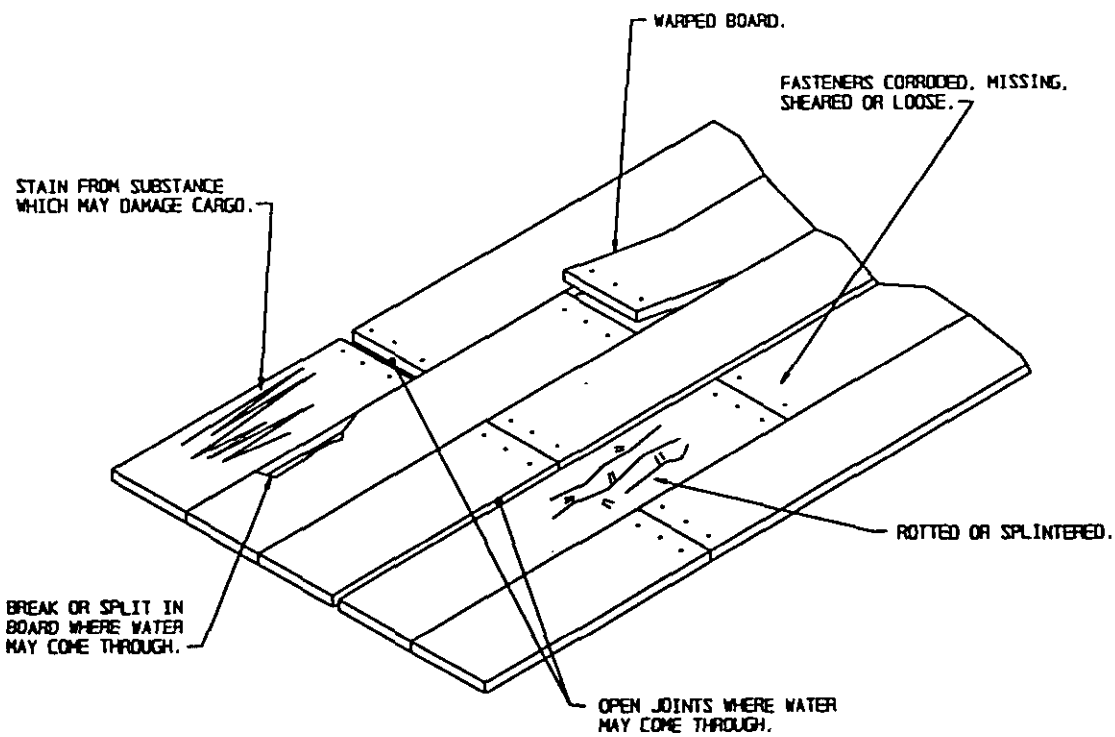

FIGURE 5.3.10 - FLOORING DAMAGE

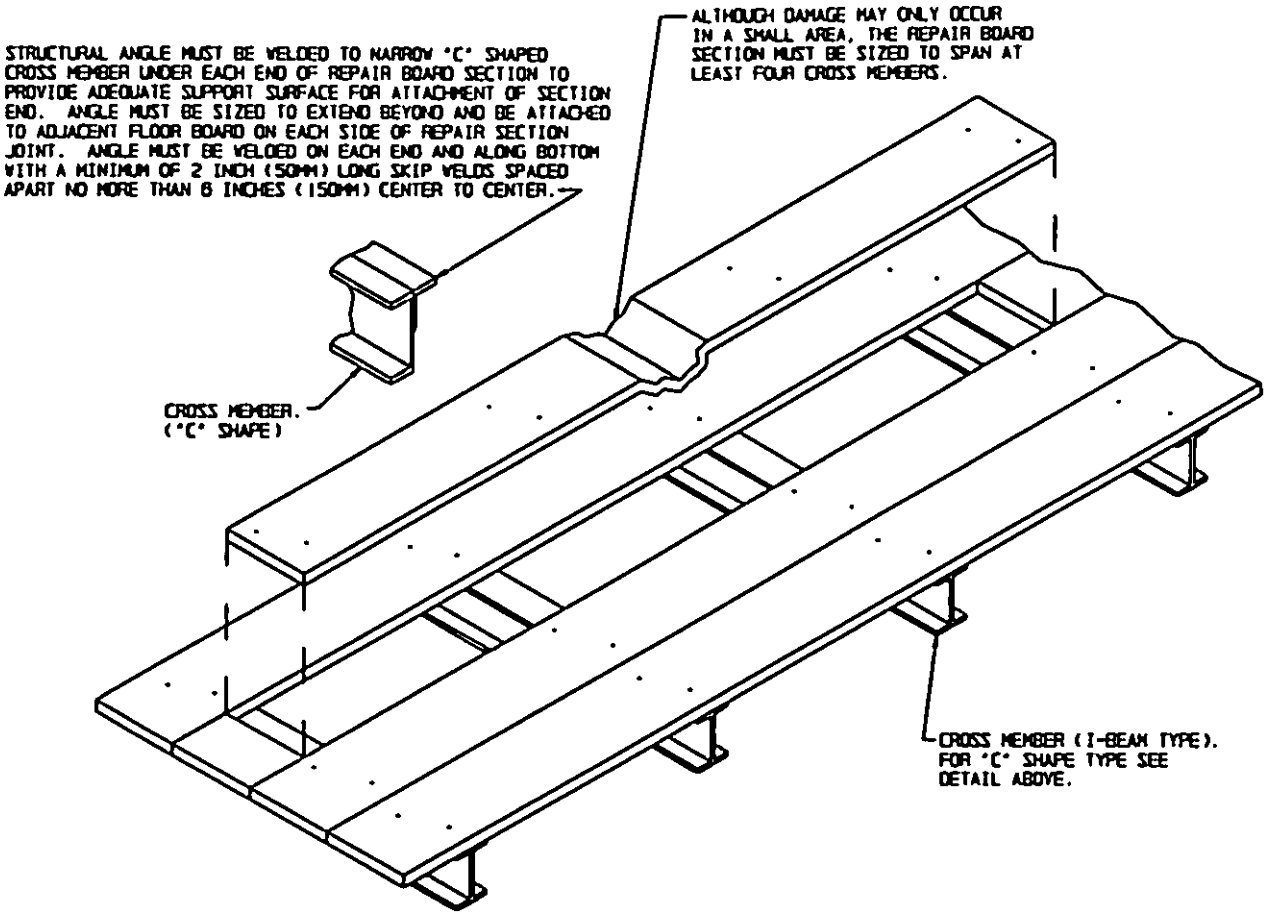

REMOVAL OF DAMAGED BOARD

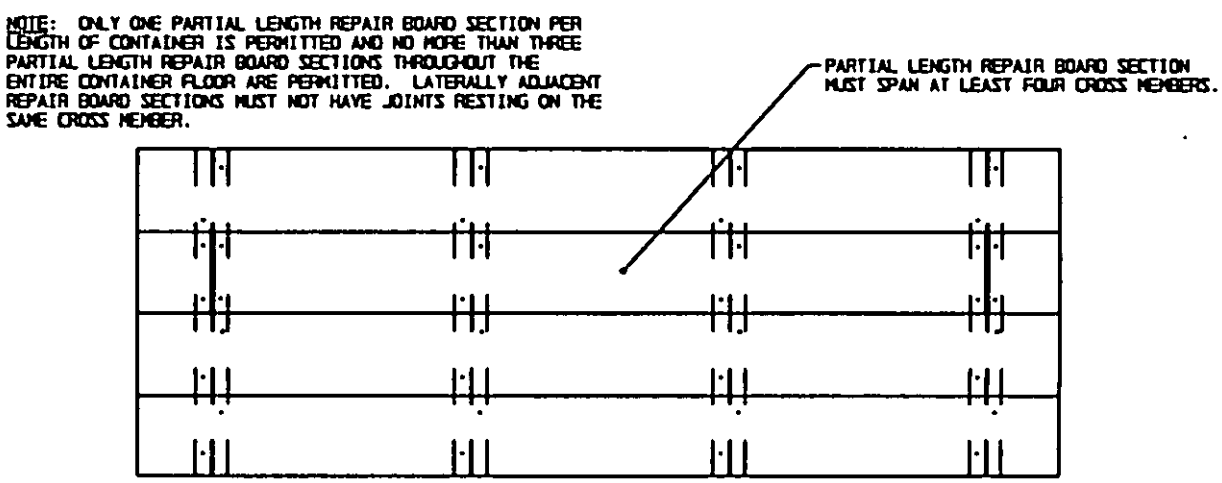

FINISHED REPAIR

FIGURE 5.3.11 - EXAMPLE OF FLOORING REPAIR

5.3.14 Miscellaneous Components. The following miscellaneous components affect the serviceability of a container as follows:

a. Threshold Plate. Presence of this plate is not mandatory. If present, the threshold plate must be safely fastened to the floor. Any plate damage that would impair the safe loading of cargo is cause for rejection.

b. Lining and Lining Shield. Presence of interior wall lining is not mandatory. If present, it must be safely fastened to the walls. Surface of wall lining must be free from protrusions or any other damage that would impair the safe loading of cargo. Normal wear including dents, abrasions, and small punctures that does not affect serviceability is permissible.

c. Ventilator. Presence of ventilator or ventilators is not mandatory. If present, each must be securely fastened to a wall panel. Diffused or reflective light passing through ventilator is permissible but ventilator should not permit ingress of water.

d. Placard Holder. Presence of placard holder or holders is not mandatory. If present, each must be securely fastened to a wall or door panel. If the container design permits, each holder should be positioned within a recessed area or on a marking panel to preclude the holder from being damaged during container handling and transport. Damage including dents, bends, or crumpling is permissible provided placards may be properly installed elsewhere on container and the damaged holder does not preclude proper handling and securement of the container onto a vehicle or into the cell of a ship.

e. Pop Rivets. If hollow core pop rivets are used for affixing data plates, placard holders, ventilators, etc.; any open holes through center of such pop rivets must be caulked to prevent water seepage.

f. Door Holder (Tieback). Presence of door holder or holders is not mandatory. If present and damaged, the damaged holder must not preclude proper handling and securement of container onto a vehicle or into a ship's cell.

6. CONTAINER INSPECTION PROCEDURES

6.1 Prerequisites:

6.1.1 Container Type. The container type offered for service must be of suitable size, style, and configuration for its intended use. Container size and capacity must be acceptable for the shape and weight of commodity to be shipped. Container size and configuration must be compatible with handling and transportation equipment to be utilized. Style of container must meet approval of countries involved with shipment. Style of container must provide proper degree of security required for commodity to be shipped. Container must be configured with non-metallic lining if container is designated to transport explosives requiring "Magazine Stowage Type A".

6.1.2 Inspector Qualifications. The CSC re-inspection must be performed by certified personnel. DOD personnel may be certified by attending the AMMO-L-10 Intermodal Dry Cargo Container CSC Re-inspection Course conducted by the U.S. Army Defense Ammunition Center and School, Savanna, IL 61074-9639. DOD inspectors must be re-certified every 48 months. Serviceability (pre-loading) inspection should be performed by fully qualified and competent personnel. Personnel are considered to be fully qualified if they have at one time received formal training and are experienced in the detection of container structural damage.

6.1.3 Owner Representative. Inspection of a commercially owned container must be conducted in the presence of a lessor/owner's representative when container custody is changing.

6.1.4 Judgement of Criteria. The container inspection criteria will be met through a visual examination and, except where tolerances are provided, acceptance of the container will be based on the judgement of the inspector. Any unacceptable deficiencies disclosed by the examination must be corrected before the container may be used for shipment.

6.2 Suggested Tools and Equipment:

6.2.1 Straight Edge. A wire, string, or other form of a straight edge is needed to determine whether any portion of the container (e.g., a panel or a rail) protrudes pass the outside surfaces of the corner fittings.

6.2.2 Measuring Tape (Ruler). A measuring tape (ruler) is required to check dimensional tolerances and container alignment.

6.2.3 Welder's Hammer. A welder's hammer (National Stock Number 5120-00-240-3096 or equivalent) is helpful in determining the strength of welds or metal structural components.

6.2.4 Ladder. A ladder or other safe means for accessing the top of the container is recommended.

6.2.5 Inspection Stands. Appendix B contains USADACS Drawing No. AC 200000210 depicting the assembly of a pair of container inspection stands. Inspection stands built in accordance to this (or equivalent) drawing provide a safe means for supporting the empty container to enable proper viewing of the container understructure. Note: DOD personnel should also refer to service specific safety guidelines about "Working Under a Suspended Load".

6.2.6 Flashlight. A flashlight improves visual acuity, especially during examination of the interior or the recesses of the understructure.

6.6.7 Chalk. Marking (circling) location of defects with chalk as they are discovered facilitates preparation of inspection report and helps maintenance personnel locate areas to be repaired.

6.6.8 Feeler Gauge. Excessive gaps in flooring may be determined by use of a 1-inch wide by 1/16-inch thick feeler gauge. Any suitable strip of metal may be used.

6.3 Documents:

6.3.1 Inspection Checklist. A Container Inspection Checklist should be used to ensure complete examination and to identify acceptance or reason(s) for rejection. Appendix A contains recommended checklists for the four types of containers described in this handbook (i.e. End-Opening, Side-Opening, Open-Top, and Flatrack). Checklist items not relevant to type of container being inspected (such as roof reinforcement plates when not present) should be marked "NA" for not applicable.

6.3.2 DD Form 2282 Decal. A CSC re-inspection due date (month and year) must be marked on the CSC plate. A DD Form 2282 Decal should be used for this purpose. When performing a CSC examination, the DOD inspector will apply a DD Form 2282 decal if the container is found to be acceptable. This decal is not required on a new container since the first re-inspection due date must be inscribed on the original CSC plate. The first CSC re-inspection due date assigned to a newly manufactured container provides a maximum interval of 5 years. Each subsequent CSC examination is only current for a maximum interval of 30 months. A CSC re-inspection should always be performed upon completion of maintenance and a new decal should then be applied to indicate a new due date at 30 months away. A container is unacceptable for loading with cargo if the DD Form 2282 decal indicates that CSC re-inspection is due within 60 days or less.

6.3.3 Inspection Report. Inspection of DOD owned containers or containers under the maintenance purview of the DOD must also be reported on the proper Service form such as DA Form 2404, "Equipment Inspection and Maintenance Worksheet". A copy of the inspection report must be completed and forwarded to the Container Control Office of the owning service. Inspection reports for containers in the Common User Fleet must be sent to the Joint Container Control Office (JCCO) at the following address: Commander, Military Traffic Management Command Eastern Area, ATTN: MTEOP-ITC, Bayonne, NJ 07002-5302. Note: Centralized control of this documentation is important since the law (CFR 49 part 452.3b) requires that the container inspection report must be made available to the U.S. Coast Guard upon their request.

6.4 Recommended Inspection Sequence.

Inspection should be performed on the container while empty. Although any sequence of inspection is permissible, the sequence of inspection contained herein is recommended and coincides with the checklists provided in this handbook. A complete examination must be performed prior to acceptance. Even if cause for rejection is identified, a complete inspection of DOD owned containers or commercial containers under the maintenance purview of the DOD must be performed so a complete report of container condition can be provided in accordance with paragraph 6.3.3 above.

6.4.1 Markings and Data Plates. Check for appropriate markings and data plates. Annotate the ISO owner code serial number and the existing CSC re-inspection date on the Inspection Checklist.

6.4.2 Overall Configuration. Check for any distortion of the overall configuration great enough to preclude proper engagement of handling/lifting equipment, mounting and securing on chassis or vehicle, or insertion into the cell of a ship. If container alignment is in question, use a measuring tape to check dimensional tolerances in accordance with Figure 5.1. Using a suitable straight edge, check for any protrusions beyond the outside surfaces of the corner fittings.

6.4.3 Door End or Side. Examine the door end or side of the container. Check main structural components of door frame for defects. Check condition and operation of doors and door hardware.

6.4.4 Exterior Sides and Ends. Proceed to examine the container exterior on all remaining sides and ends for any defects on main structural components or unacceptable damage on wall panels.

6.4.5 Roof (Exterior). Obtain access to the roof and inspect the corner fitting apertures (openings), reinforcement plates, top side and end rails, door header, and roof panels for defects.

6.4.6 Understructure. Position the container on inspection stands to enable safe viewing of the container understructure. Examine the corner fitting apertures, side and end rails, sill, cross members, and forklift tunnels for defects.

6.4.7 Interior. Enter the container and check condition of walls, roof, and flooring. If present, also examine condition of cargo restraint system. In containers without integral mechanical restraint systems, ensure that the structural configuration provides sufficient load bearing surfaces for dunnage materials to be safely installed against.

6.4.8 Light Leak Test. Remain in container, have assistant close the door(s), and mark areas permitting direct (not diffused) light penetration. Re-open doors and re-examine the suspect areas from both the inside and the outside to determine their affect on the structural serviceability of the container. Keep in mind that neither CSC, IMDG Code, nor CFR 49 state that light leaks are cause for rejection. A light leak test only serves as a tool to help spot certain types of defects or deficiencies. Causes for light leaks, therefore, are categorized into the following five types for purposes of clarifying the structural serviceability of container:

a. A light leak through a weld joint between main structural members indicates possibility of defective weld juncture. Further inspection of joint must be conducted to ascertain if joint is adequate.

b. A light leak through a seam weld in a wall, roof, or door panel or around perimeter of such panels indicates skip or porosity in weld. This typically is a pinhole light leak and does not degrade the main structural integrity of the container. Caulking may be applied in many cases to preclude any water seepage. Caulking should, if possible, be performed as directed by the inspector as he/she sees fit. Note: The guidance of this sub-paragraph only refers to weld seams and perimeter welding and does not refer to holes or tears in wall, roof, or door panels which must be repaired by affixing additional material (patch) to the panel.

c. Light leaks around door gaskets indicate possibility of water seepage. If gasket is not damaged (torn, missing, or severely deformed), gasket is most likely providing same weathertight integrity as when container was manufactured. Inspector should be looking for damaged gaskets that no longer provide reasonable weather-proof integrity. A tiny light leak is not a cause for rejection.

d. Light leaks around floor boards indicate possibility of water seepage or entrance of sparks when transported on open frame conveyance. Only light leaks due to damaged boards or excessive gaps should be cause for rejection. Excessive gaps may be determined by use of a 1-inch wide by 1/16-inch thick feeler gauge. If the feeler gauge can be easily inserted "vertically" through the gap to the underside of the container, the gap is considered excessive. Caulking may be used to seal narrow gaps (i.e., less than 1/2-inch wide). Wider gaps must be repaired by replacing deficient boards with new boards of similar style.

e. Diffused (reflective) light through or around components such as ventilators or lashing rings is not cause for rejection. Any indication of a steady ingress of water or lack of reasonable weather-proof integrity shall be the only cause for rejection.

END-OPENING CONTAINER INSPECTION CHECKLIST

(CIRCLE DEFECTS)

DATE OF INSPECTION _____ ISO SERIAL NUMBER _____

INSPECTION LOCATION _____ CSC RE-INSPECTION DATE _____

COMPONENT OR ITEM	ACCEPT	REJECT	REMARKS (DEFICIENCIES)
1. MARKINGS & DATA PLATE			
ISO MARKINGS			
CSC SAFETY APPROVAL			
MANUFACTURER'S DATA			
TIR, TCT & VIC APPROVALS *			
2. OVERALL CONFIGURATION			
DIMENSIONS			
DISTORTION			
PROTRUSIONS			
3. DOOR END (REAR)			
CORNER FITTINGS (4 each)			
CORNER POSTS (2 each)			
DOOR HEADER			
DOOR SILL			
DOOR PANELS			
HINGES			
HINGE PIN WELDS *			
LOCKING BARS			
LOCKING BAR MOUNTING BRACKETS			
CAMS			
CAM RETAINERS			
LOCKING HANDLES			
LOCKING HANDLE RETAINERS			
CUSTOMS CATCH *			
DOOR SEALS (GASKETS)			
RAIN GUTTER *			
J-BARS *			
4. CURB SIDE EXTERIOR			
TOP SIDE RAIL			
BOTTOM SIDE RAIL			
FORKLIFT POCKETS *			
WALL PANELS			
WALL POSTS *			
5. FRONT END EXTERIOR			
CORNER FITTINGS (4 each)			
CORNER POSTS (2 each)			
TOP END RAIL			
BOTTOM END RAIL			
WALL PANELS			
WALL POSTS *			
6. ROAD SIDE EXTERIOR			
TOP SIDE RAIL			
BOTTOM SIDE RAIL			
FORKLIFT POCKETS *			
WALL PANELS			
WALL POSTS *			
7. ROOF EXTERIOR			
CORNER FITTING APERTURES			
TOP SIDE RAILS			
TOP END RAIL			
DOOR HEADER			
ROOF PANELS			
REINFORCEMENT PLATES *			
8. UNDERSTRUCTURE			
CORNER FITTING APERTURES			
CROSS MEMBERS			
FORKLIFT TUNNELS *			
SIDE RAILS			
END RAIL			
DOOR SILL			
9. INTERIOR			
FLOORING			
FLOOR FASTENERS			
THRESHOLD PLATE *			
ROOF PANELS			
ROOF BOWS *			
WALL PANELS			
LINING *			
MECHANICAL RESTRAINT SYSTEM *			
LOAD BEARING SURFACES *			

NOTE: AN ITEM WITH AN ASTERISK (*) MAY OR MAY NOT BE RELEVANT. MARK "NA" IN THE REMARKS COLUMN FOR ITEMS WHICH ARE NOT APPLICABLE.

ACCEPTED ____ REJECTED ____ NEW CSC RE-INSPECTION DATE _____

INSPECTOR: (PRINT NAME) _____

(SIGNATURE) _____

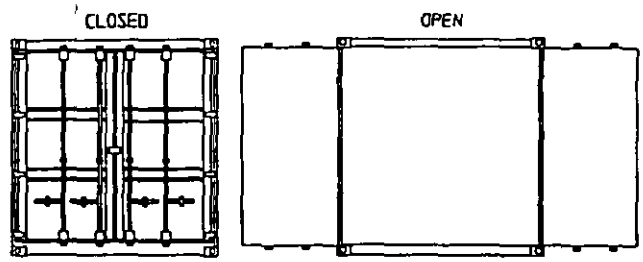

DOORS

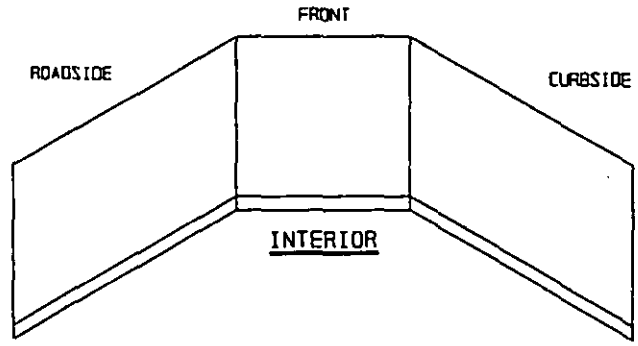

INTERIOR

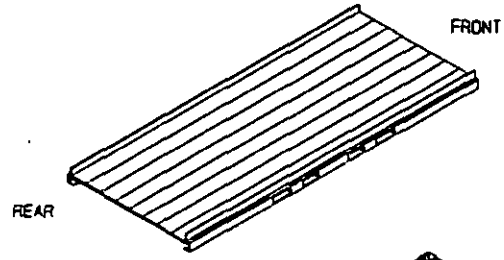

FLOOR

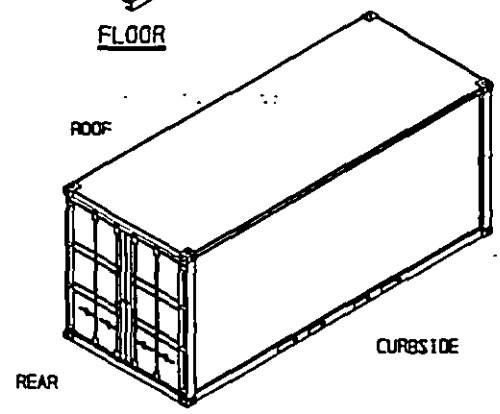

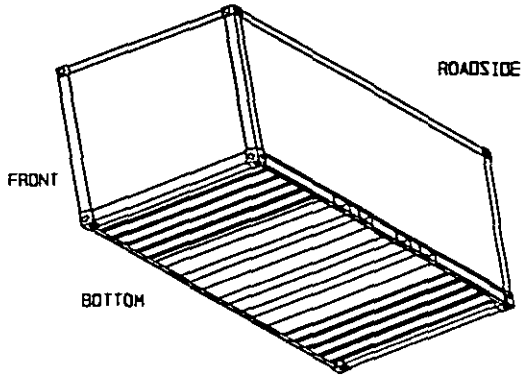

SIDE-OPENING CONTAINER INSPECTION CHECKLIST

DATE OF INSPECTION _____ ISO SERIAL NUMBER _____

INSPECTION LOCATION _____ CSC RE-INSPECTION DATE _____

COMPONENT OR ITEM	ACCEPT	REJECT	REMARKS (DEFICIENCIES)
1. MARKINGS & DATA PLATE			
ISO MARKINGS			
CSC SAFETY APPROVAL			
MANUFACTURER'S DATA			
TIR, TCT & VIC APPROVALS *			
2. OVERALL CONFIGURATION			
DIMENSIONS			
DISTORTION			
PROTRUSIONS			
3. DOOR SIDE			
DOOR HEADER (TOP SIDE RAIL)			
DOOR SILL (BOTTOM SIDE RAIL)			
FORKLIFT POCKETS *			
DOOR PANELS			
HINGES			
HINGE PIN WELDS *			
LOCKING BARS			
LOCKING BAR MOUNTING BRACKETS			
CAMS			
CAM RETAINERS			
LOCKING HANDLES			
LOCKING HANDLE RETAINERS			
CUSTOM'S CATCH *			
DOOR SEALS (GASKETS)			
RAIN GUTTER *			
J-BARS *			
4. RIGHT END EXTERIOR			
CORNER FITTINGS (4 each)			
CORNER POSTS (2 each)			
TOP END RAIL			
BOTTOM END RAIL			
WALL PANELS			
WALL POSTS *			
5. BACK SIDE EXTERIOR			
TOP SIDE RAIL			
BOTTOM SIDE RAIL			
FORKLIFT POCKETS *			
WALL PANELS			
WALL POSTS *			
6. LEFT END EXTERIOR			
CORNER FITTINGS (4 each)			
CORNER POSTS (2 each)			
TOP END RAIL			
BOTTOM END RAIL			
WALL PANELS			
WALL POSTS *			
7. ROOF EXTERIOR			
CORNER FITTING APERTURES			
TOP SIDE RAIL (BACK SIDE)			
TOP SIDE RAIL (DOOR HEADER)			
TOP END RAILS			
ROOF PANELS			
REINFORCEMENT PLATES *			
8. UNDERSTRUCTURE			
CORNER FITTING APERTURES			
CROSS MEMBERS			
FORKLIFT TUNNELS *			
BOTTOM SIDE RAIL (BACK SIDE)			
BOTTOM SIDE RAIL (DOOR SILL)			
BOTTOM END RAILS			
9. INTERIOR			
FLOORING			
FLOOR FASTENERS			
ROOF PANELS			
ROOF BOWS *			
WALL PANELS			
LINING *			
TIEDOWN PROVISIONS *			
LOAD BEARING SURFACES *			

NOTE: AN ITEM WITH AN ASTERISK (*) MAY OR MAY NOT BE RELEVANT.
MARK "NA" IN THE REMARKS COLUMN FOR ITEMS WHICH ARE NOT APPLICABLE.

ACCEPTED ____ REJECTED ____ NEW CSC RE-INSPECTION DATE _____

INSPECTOR: (PRINT NAME) _____

(SIGNATURE) _____

(CIRCLE DEFECTS)

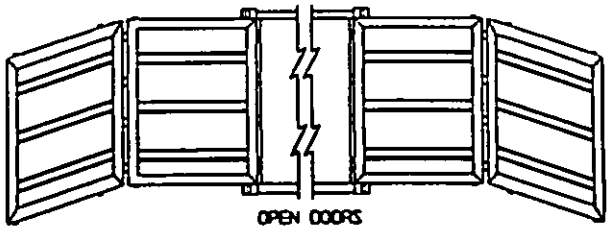

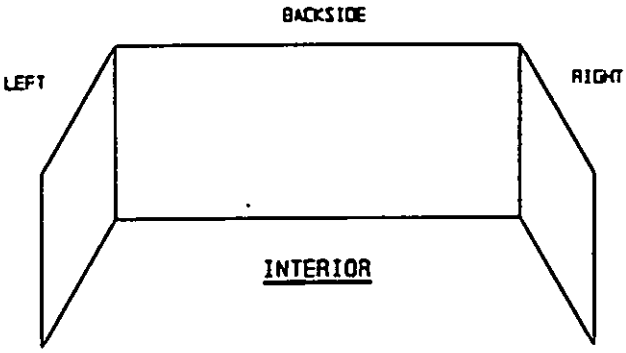

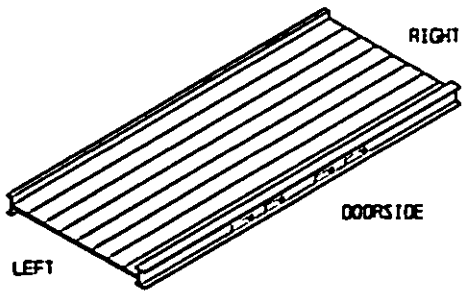

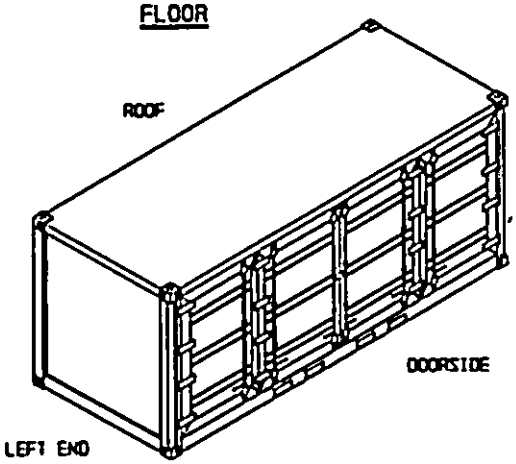

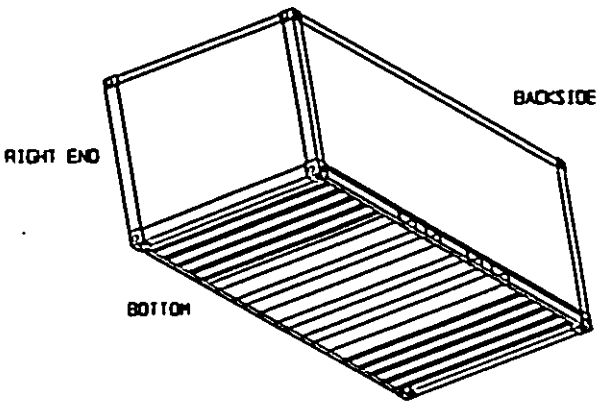

OPEN-TOP CONTAINER INSPECTION CHECKLIST

DATE OF INSPECTION _____ ISO SERIAL NUMBER _____

INSPECTION LOCATION _____ CSC RE-INSPECTION DATE _____

COMPONENT OR ITEM	ACCEPT	REJECT	REMARKS (DEFICIENCIES)
1. MARKINGS & DATA PLATE			
ISO MARKINGS			
CSC SAFETY APPROVAL			
MANUFACTURER'S DATA			
TIR, TCT & VIC APPROVALS *			
2. OVERALL CONFIGURATION			
DIMENSIONS			
DISTORTION			
PROTRUSIONS			
3. DOOR END (REAR)			
CORNER FITTINGS (4 each)			
CORNER POSTS (2 each)			
HEADER AND HEADER PINS *			
DOOR SILL			
DOOR PANELS			
HINGES			
HINGE PIN WELDS *			
LOCKING BOLTS *			
SAFETY CHAINS *			
LOCKING BARS *			
LOCKING BAR MOUNTING BRACKETS *			
CAMS *			
CAM RETAINERS *			
LOCKING HANDLES			
LOCKING HANDLE RETAINERS			
DOOR SEALS (GASKETS)			
J-BARS *			
4. CURB SIDE EXTERIOR			
TOP SIDE RAIL			
BOTTOM SIDE RAIL			
FORKLIFT POCKETS *			
WALL PANELS			
5. FRONT END EXTERIOR			
CORNER FITTINGS (4 each)			
CORNER POSTS (2 each)			
TOP END RAIL			
BOTTOM END RAIL			
WALL PANELS			
6. ROAD SIDE EXTERIOR			
TOP SIDE RAIL			
BOTTOM SIDE RAIL			
FORKLIFT POCKETS *			
WALL PANELS			
7. ROOF EXTERIOR			
CORNER FITTING APERTURES			
ROOF BOWS			
TARP			
WELDED LOOPS			
TIR CABLE			
RAIN GUTTERS *			
8. UNDERSTRUCTURE			
CORNER FITTING APERTURES			
CROSS MEMBERS			
FORKLIFT TUNNELS *			
FLOOR WELDS *			
SIDE RAILS			
END RAIL			
DOOR SILL			
9. INTERIOR			
FLOORING (WOOD OR METAL)			
FLOOR FASTENERS OR WELDS			
DOOR RAMP SURFACE *			
THRESHOLD PLATE *			
WALL PANELS			
LINING *			
MECHANICAL RESTRAINT SYSTEM *			
LOAD BEARING SURFACES *			

NOTE: AN ITEM WITH AN ASTERISK (*) MAY OR MAY NOT BE RELEVANT. MARK "NA" IN THE REMARKS COLUMN FOR ITEMS WHICH ARE NOT APPLICABLE.

ACCEPTED ____ REJECTED ____ NEW CSC RE-INSPECTION DATE _____

INSPECTOR: (PRINT NAME) _____

(SIGNATURE) _____

(CIRCLE DEFECTS)

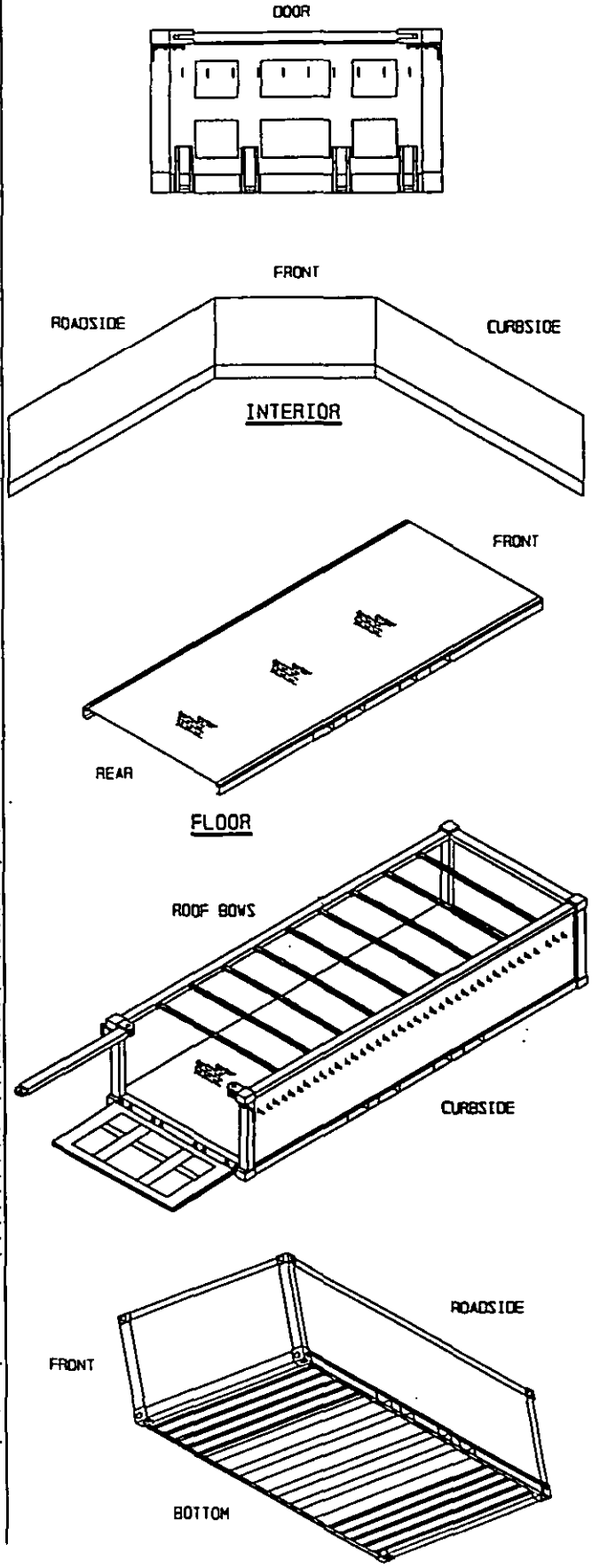

FLATRACK CONTAINER INSPECTION CHECKLIST

(CIRCLE DEFECTS)

DATE OF INSPECTION _____ ISO SERIAL NUMBER _____

INSPECTION LOCATION _____ CSC RE-INSPECTION DATE _____

COMPONENT OR ITEM	ACCEPT	REJECT	REMARKS (DEFICIENCIES)
1. MARKINGS & DATA PLATE			
ISO MARKINGS			
CSC SAFETY APPROVAL			
MANUFACTURER'S DATA			
TIR, TCT & VIC APPROVALS *			
2. OVERALL CONFIGURATION			
DIMENSIONS			
DISTORTION			
PROTRUSIONS			
3. END A			
CORNER FITTINGS (4 each)			
CORNER POSTS (2 each)			
TOP APERTURES			
TOP END RAIL			
BOTTOM END RAIL			
WALL PANELS			
WALL POSTS *			
LOCKING HARDWARE *			
4. SIDE A			
SIDE RAIL			
STANCHIONS			
TIE DOWN PROVISIONS			
FORKLIFT POCKETS *			
5. END B			
CORNER FITTINGS (4 each)			
CORNER POSTS (2 each)			
TOP APERTURES			
TOP END RAIL			
BOTTOM END RAIL			
WALL PANELS			
WALL POSTS *			
LOCKING HARDWARE *			
6. SIDE B			
SIDE RAIL			
STANCHIONS			
TIE DOWN PROVISIONS			
FORKLIFT POCKETS *			
7. UNDERSTRUCTURE			
CORNER FITTING APERTURES			
CROSS MEMBERS			
FORKLIFT TUNNELS *			
SIDE RAILS			
END RAILS			
8. CARGO AREA			
FLOORING			
FLOOR FASTENERS			
LOAD BEARING SURFACES *			
STACKING CONES *			

NOTE: AN ITEM WITH AN ASTERISK (*) MAY OR MAY NOT BE RELEVANT. MARK "NA" IN THE REMARKS COLUMN FOR ITEMS WHICH ARE NOT APPLICABLE.

ACCEPTED ____ REJECTED ____ NEW CSC RE-INSPECTION DATE _____

INSPECTOR: (PRINT NAME) _____

(SIGNATURE) _____

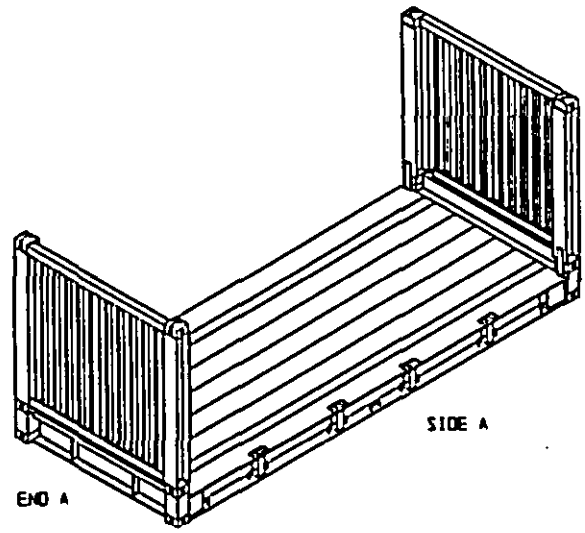

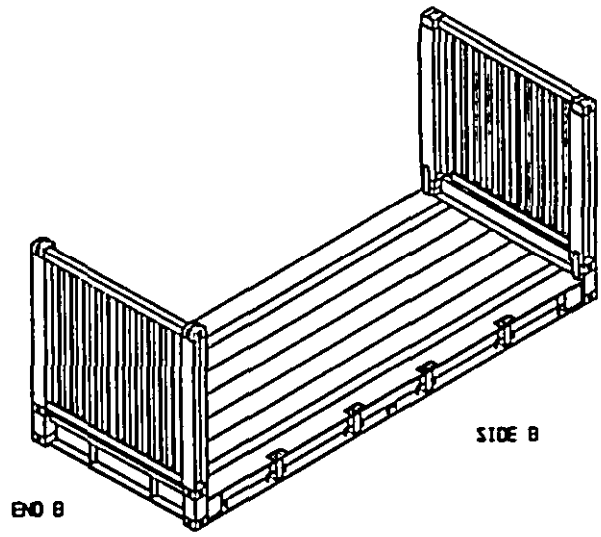

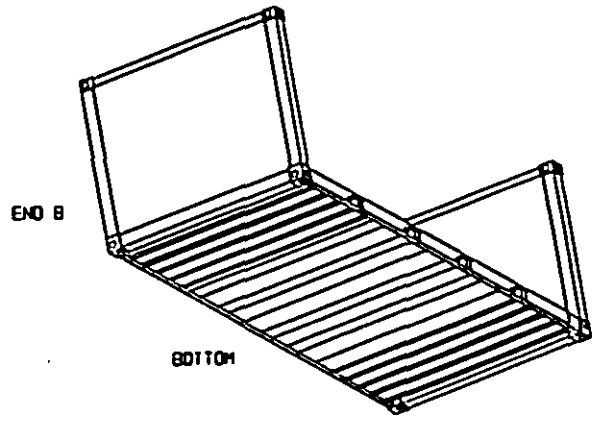

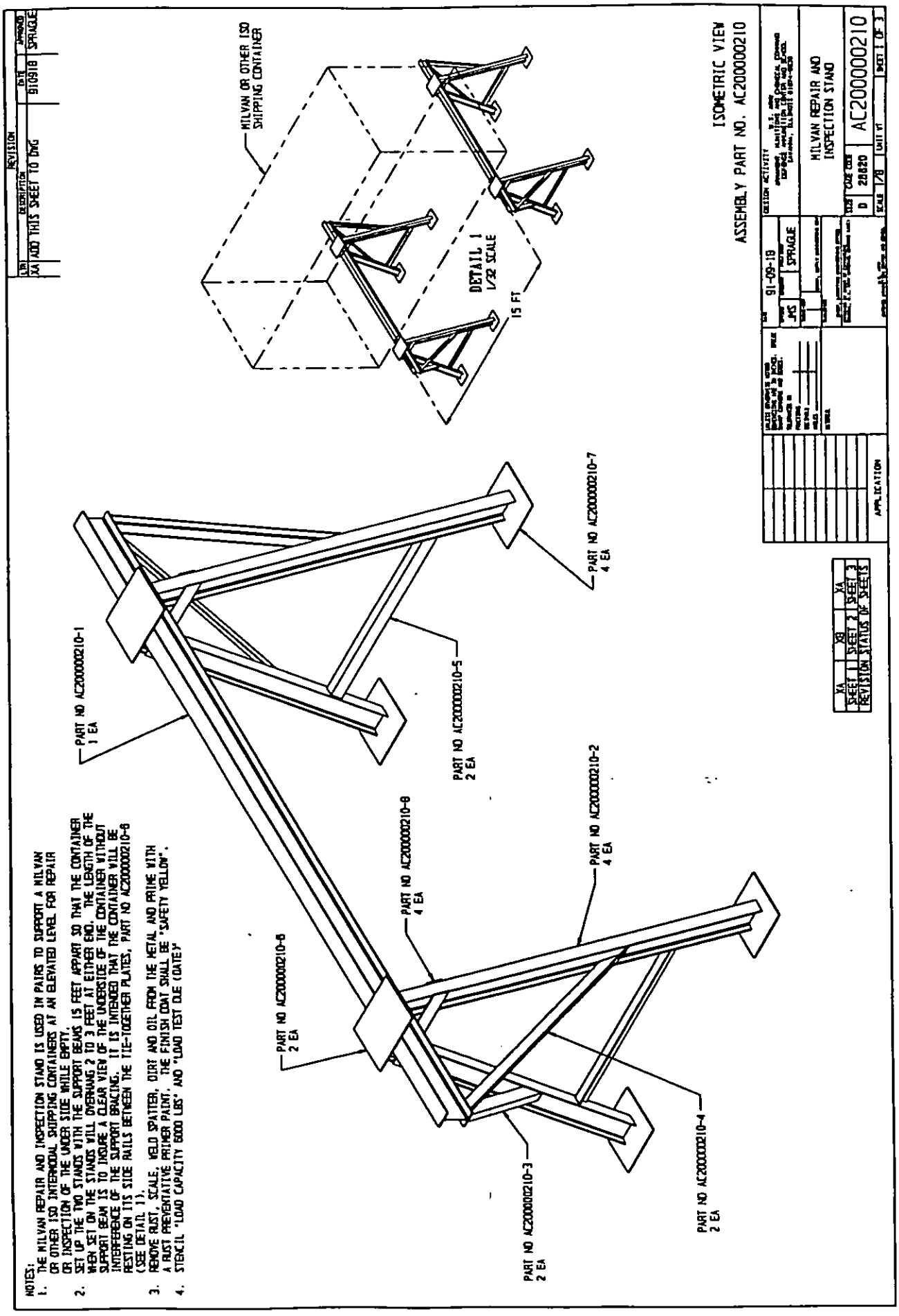
NOTES:
1. THE MILVAN REPAIR AND INSPECTION STAND IS USED IN PAIRS TO SUPPORT A MILVAN OR OTHER ISO INTERMODAL SHIPPING CONTAINERS AT AN ELEVATED LEVEL FOR REPAIR OR INSPECTION OF THE UNDER SIDE WHILE EMPTY.
2. SET UP THE TWO STANDS WITH THE SUPPORT BEAMS 15 FEET APPART SO THAT THE CONTAINER WHEN SET ON THE STANDS WILL OVERHANG 2 TO 3 FEET AT EITHER END. THE LENGTH OF THE SUPPORT BEAM IS TO INSURE A CLEAR VIEW OF THE UNDERSIDE OF THE CONTAINER WITHOUT INTERFERENCE OF THE SUPPORT BRACING. IT IS INTENDED THAT THE CONTAINER WILL BE RESTING ON ITS SIDE RAILS BETWEEN THE TIE-TOGETHER PLATES, PART NO AC200000210-6 (SEE DETAIL 1).
3. REMOVE RUST, SCALE, WELD SPATTER, DIRT AND OIL FROM THE METAL AND PRIME WITH A RUST PREVENTATIVE PRIMER PAINT. THE FINISH COAT SHALL BE "SAFETY YELLOW".
4. STENCIL "LOAD CAPACITY 6000 LBS" AND "LOAD TEST DUE (DATE)"
PART NO AC200000210-1 1 EA
PART NO AC200000210-2 4 EA
PART NO AC200000210-3 2 EA
PART NO AC200000210-4 2 EA
PART NO AC200000210-5 2 EA
PART NO AC200000210-6 2 EA
PART NO AC200000210-7 4 EA
PART NO AC200000210-8 4 EA
MILVAN OR OTHER ISO SHIPPING CONTAINER
DETAIL 1
1/32 SCALE
15 FT
ISOMETRIC VIEW
ASSEMBLY PART NO. AC200000210
91-09-18
SPRAGUE
MILVAN REPAIR AND INSPECTION STAND
AC200000210
D
28820
1/8
SHEET 1 OF 3
APPLICATION
XA
XB
XA
SHEET 1
SHEET 2
SHEET 3
REVISION STATUS OF SHEETS
REVISION
LTR
DESCRIPTION
DATE
APPROVED
XA
ADD THIS SHEET TO DWG
910918
SPRAGUE

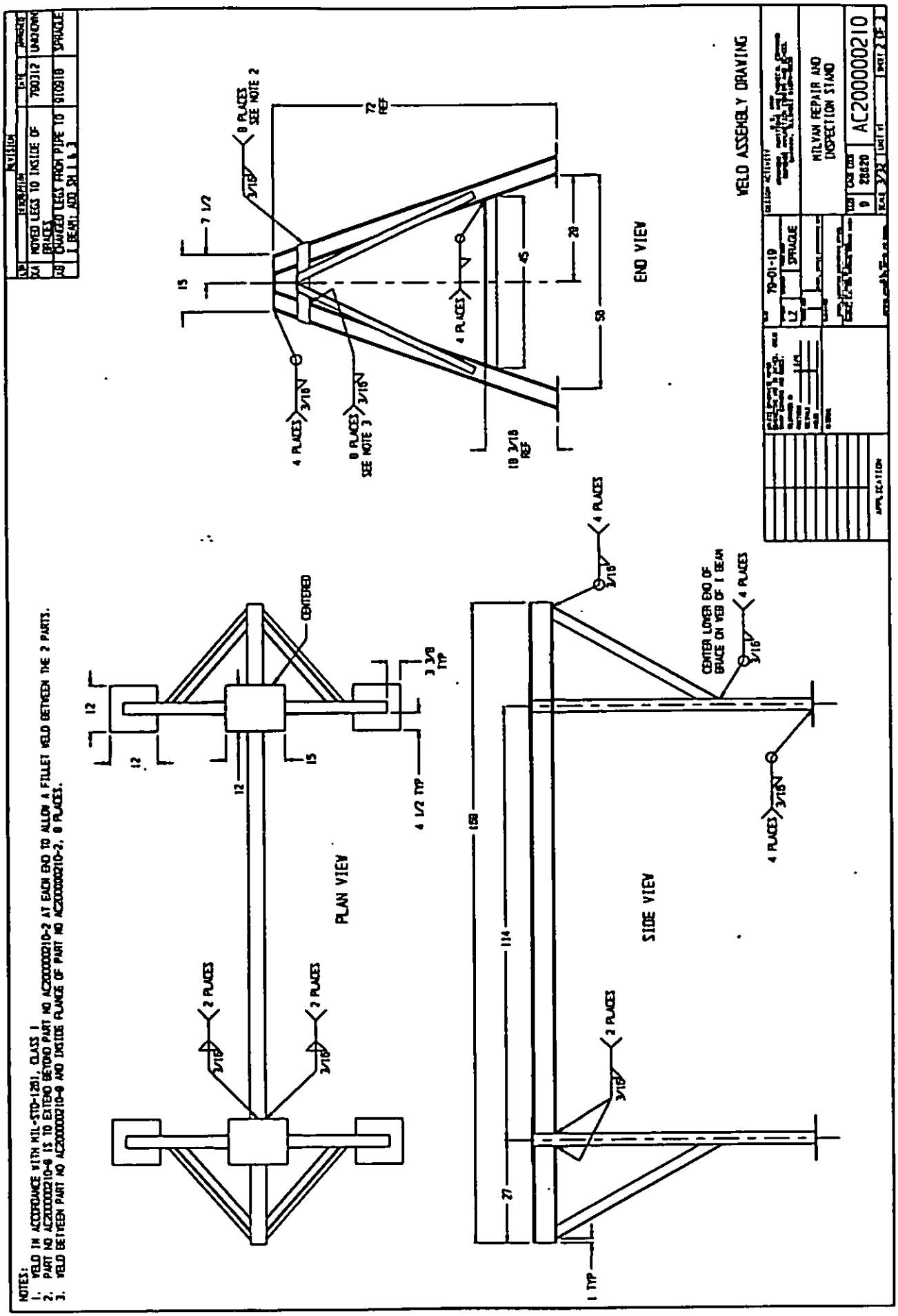
NOTES:
1. WELD IN ACCORDANCE WITH MIL-STD-1261, CLASS I
2. PART NO AC2000002210-9 IS TO EXTEND BEYOND PART NO AC2000002210-2 AT EACH END TO ALLOW A FILLET WELD BETWEEN THE 2 PARTS.
3. WELD BETWEEN PART NO AC2000002210-9 AND INSIDE FLANGE OF PART NO AC2000002210-2, 8 PLACES.
PLAN VIEW
SIDE VIEW
END VIEW
WELD ASSEMBLY DRAWING
MILVAN REPAIR AND INSPECTION STAND
AC2000002210

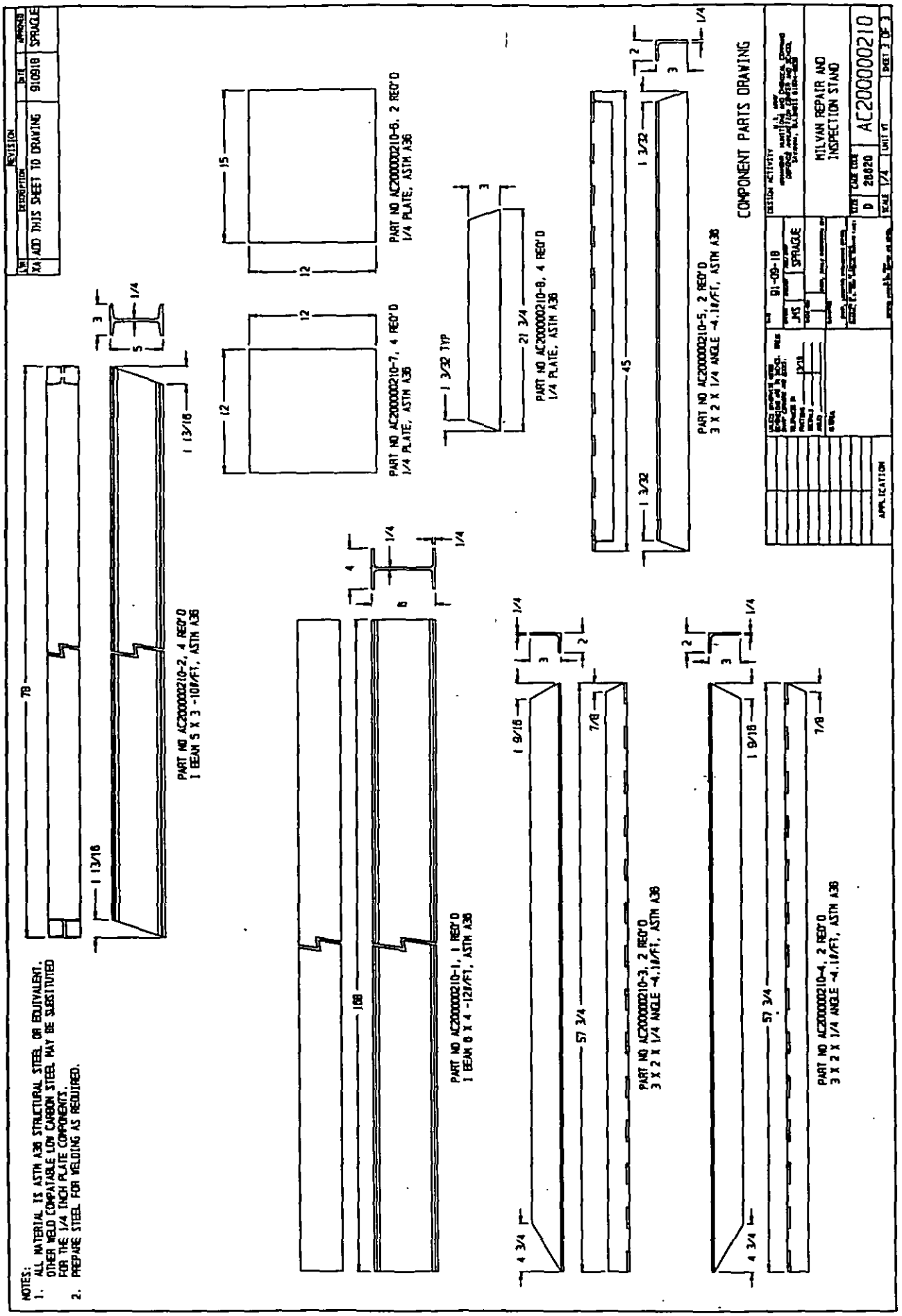
NOTES:
1. ALL MATERIAL IS ASTM A36 STRUCTURAL STEEL OR EQUIVALENT. OTHER WELD COMPATABLE LOW CARBON STEEL MAY BE SUBSTITUTED FOR THE 1/4 INCH PLATE COMPONENTS.
2. PREPARE STEEL FOR WELDING AS REQUIRED.
REVISION
XA ADD THIS SHEET TO DRAWING 910918 SPRAGUE
PART NO AC200000210-1, 1 REQ'D
I BEAM 6 X 4 -12#/FT, ASTM A36
PART NO AC200000210-2, 4 REQ'D
I BEAM 5 X 3 -10#/FT, ASTM A36
PART NO AC200000210-3, 2 REQ'D
3 X 2 X 1/4 ANGLE -4.1#/FT, ASTM A36
PART NO AC200000210-4, 2 REQ'D
3 X 2 X 1/4 ANGLE -4.1#/FT, ASTM A36
PART NO AC200000210-5, 2 REQ'D
3 X 2 X 1/4 ANGLE -4.1#/FT, ASTM A36
PART NO AC200000210-6, 2 REQ'D
1/4 PLATE, ASTM A36
PART NO AC200000210-7, 4 REQ'D
1/4 PLATE, ASTM A36
PART NO AC200000210-8, 4 REQ'D
1/4 PLATE, ASTM A36
COMPONENT PARTS DRAWING
MILVAN REPAIR AND INSPECTION STAND
AC200000210
91-09-18
SPRAGUE
APPLICATION

ALPHABETICAL INDEX OF TERMINOLOGY

NOMENCLATURE	PARAGRAPH	PAGE
ACEP (Approved Continuous Examination Program)	4.5.5	22
Anti-rack Hardware	4.3.12	16
Backup Plate	4.6.4	28
Bottom End Rail	4.1.7	10
Bottom Side Rail	4.1.10	10
CSC (International Convention for Safe Containers)	4.5.3	22
CSC Safety Approval Plate	4.5.4	22
Cam	4.3.8	16
Cam Retainer	4.3.9	16
Cargo Restraint	4.4.3	18
Caulking	4.6.11	28
Consolidated Data Plate	4.5.11	22
Conventions and Markings	4.5	22
Corner Fitting	4.1.1	10
Corner Post	4.1.2	10
Corrosive Failure	4.6.10	28
Cross Member	4.1.11	10
Customs Catch	4.3.13	16
Damage and Repair	4.6	28
Door Assembly	4.3	16
Door Header	4.1.3	10
Door Panel	4.3.1	16
Door Seal (Gasket)	4.3.14	16
Door Sill	4.1.4	10
Door Locking Handle	4.3.10	16
Door Locking Handle Retainer	4.3.11	16
Dunnage	4.4.3(b)	18
Flooring	4.2.14	12
Forklift Pocket Strap	4.1.14	10
Forklift Pockets	4.1.13	10
Front End Frame	4.1.8	10
FRP (Fiberglass Reinforced Plywood)	4.2.1	12
Gasket (Door Seal)	4.3.14	16
Gooseneck Tunnel	4.1.15	10
Gusset	4.6.3	28
Hinge	4.3.3	16
Hinge Pin	4.3.4	16
Hinge Pin Weld	4.3.5	16
Hole	4.6.7	28
ISO (International Organization for Standardization)	4.5.1	22
ISO Markings	4.5.2	22
Insert	4.6.5	28
Intermodal	4.4.1	18
J-Bar	4.3.2	16
Joint Strip	4.2.15	12
Kick Plate	4.2.7	12

ALPHABETICAL INDEX OF TERMINOLOGY

NOMENCLATURE (continued)	PARAGRAPH	PAGE
Lashing Bar or Ring	4.4.3(e)	18
Lining	4.2.5	12
Lining Shield	4.2.6	12
Load Bearing Surface	4.4.3(c)	18
Load Retainer	4.4.3(d)	18
Locking Bar	4.3.6	16
Locking Bar Mounting Bracket	4.3.7	16
MILVAN	4.4.2	18
Magazine Stowage Type A	4.5.13	22
Manufacturer's Data Plate	4.5.10	22
Marking Panel	4.2.4	12
Maximum Gross Weight	4.4.6	18
Mechanical Restraint System	4.4.3(a)	18
Patch	4.6.1	28
Payload	4.4.5	18
Pinhole	4.6.8	28
Placard Holder	4.5.12	22
Primary Structural Components	4.1	10
Rain Gutter	4.3.15	16
Rear End Frame	4.1.5	10
Roof Bow	4.2.10	12
Roof Panel	4.2.9	12
Roof Reinforcement Plate	4.2.11	12
Section	4.6.6	28
Special Terminology	4.4	18
Splice	4.6.2	28
Stanchion	4.4.3(f)	18
TCT (Timber Component Treatment)	4.5.8	22
TIR (Transport Internationale des Routiers)	4.5.6	22
TIR Cable	4.2.13	12
TIR Markings or Plate	4.5.7	22
Tare Weight	4.4.4	18
Tarp	4.2.12	12
Threshold plate	4.2.16	12
Tiedown Provision	4.4.3(e)	18
Top End Rail	4.1.6	10
Top Side Rail	4.1.9	10
UIC (Union Internationale des Chemins de Fer)	4.5.9	22
Undercoating	4.6.12	28
Understructure	4.1.12	10
Ventilator	4.2.8	12
Wall Panel	4.2.2	12
Wall Post	4.2.3	12
Welder's Hammer	4.6.9	28

SUBJECT TERM (KEY WORD) LISTING)

Cargo restraint
Cross member
End-opening
Fitting
Flatrack container
Gooseneck tunnel
Header
Kick plate
Open top container
Payload
Lining
Maximum gross weight
Milvan
Rail
Side-opening container
Tare weight
Understructure
Wall panel
Wall post

CONCLUDING MATERIAL

Custodians:

Army – AR
Navy – SH
Air Force – 99
Marine Corps –
DLA –

Review activities:

Army – ME, SM
Navy – CG, OS
Air Force – 06, 16
Marine Corps – MC
DLA – DH

User activities:

Army – MT
Navy – SA, YD
Air Force – 69, 70
Marine Corps –
DLA – IS

Preparing activity:

Army – AR

Agent:
Us Army Defense Ammunition Center and School

(Project 8115-0536)

THIS PAGE LEFT BLANK INTENTIONALLY

STANDARDIZATION DOCUMENT IMPROVEMENT PROPOSAL

INSTRUCTIONS

1. The preparing activity must complete blocks 1, 2, 3, and 8. In block 1, both the document number and revision letter should be given.
2. The submitter of this form must complete blocks 4, 5, 6, and 7.
3. The preparing activity must provide a reply within 30 days from receipt of the form.

NOTE: This form may not be used to request copies of documents, nor to request waivers, or clarification of requirements on current contracts. Comments submitted on this form do not constitute or imply authorization to waive any portion of the referenced document(s) or to amend contractual requirements.

I RECOMMEND A CHANGE:

1. DOCUMENT NUMBER: MIL-HDBK-138A

2. DOCUMENT DATE (YYMMDD): 930621

3. DOCUMENT TITLE: CONTAINER INSPECTION HANDBOOK FOR MILITARY AND INTERMODAL CONTAINERS

4. NATURE OF CHANGE (Identify paragraph number and include proposed rewrite, if possible. Attach extra sheets if needed.)

5. REASON FOR RECOMMENDATION

6. SUBMITTER

a. NAME (Last, First, Middle Initial)

b. ORGANIZATION

c. ADDRESS (Include Zip Code)

d. TELEPHONE (Include Area Code)
(1) Commercial
(2) AUTOVON (If applicable)

7. DATE SUBMITTED (YYMMDD)

8. PREPARING ACTIVITY

a. NAME: US ARMY ARDEC STANDARDIZATION OFFICE

b. TELEPHONE (Include Area Code)
(1) Commercial: (201) 724-6671
(2) AUTOVON: 880-6671

c. ADDRESS (Include Zip Code)
ATTN: SMCAR-BAC-S
PICATINNY ARSENAL, NJ 07806-5000

IF YOU DO NOT RECEIVE A REPLY WITHIN 45 DAYS, CONTACT:
Defense Quality and Standardization Office
5203 Leesburg Pike, Suite 1403, Falls Church, VA 22041-3466
Telephone (703) 756-2340 AUTOVON 289-2340